Internorm
Windows – Doors

AT 500 ALUMINIUM-FRONT DOOR

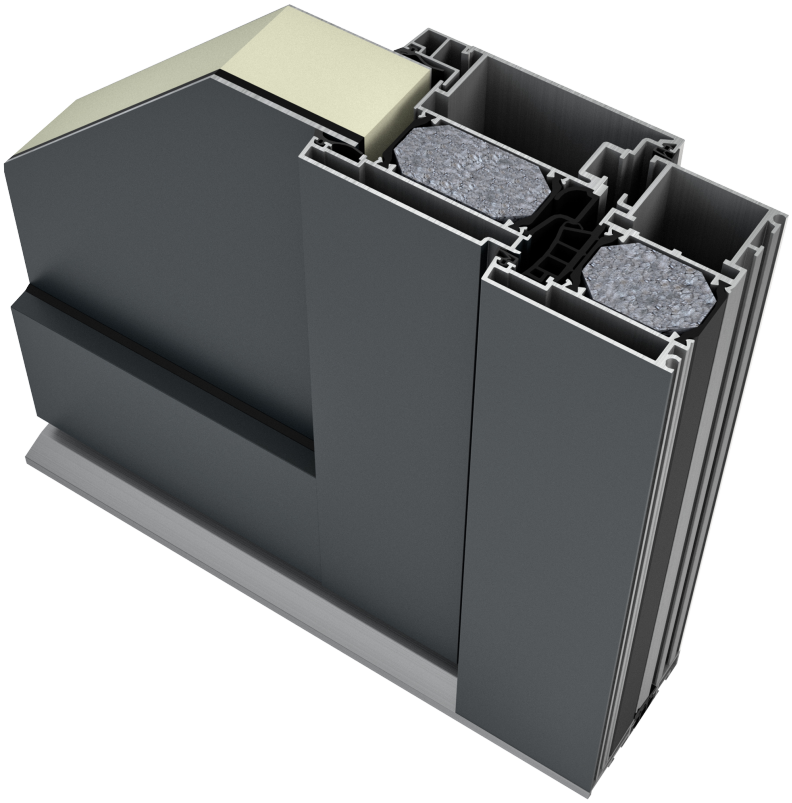

CHARACTERISTICS

Thermal insulation (in W/m²K)
U_D up to 0,87

Sound reduction (in dB)
up to 40

Security
up to RC3

Locking
Multi-locking

Profile depth (in mm)
93

I-tec Open

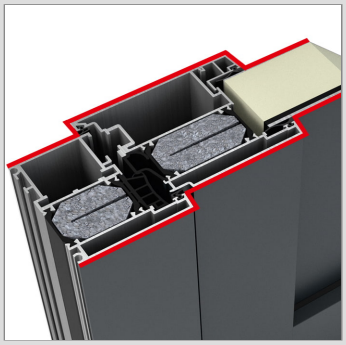

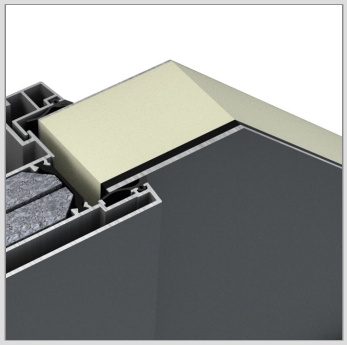



This system is characterised internally and externally by a profiled design and clean, square shapes. Different design options provide countless design possibilities. Security options offer outstanding burglary protection up to RC 3.

ALUMINIUM-FRONT DOOR

AT 500

Cuts

Schnitt unten / Section - bottom

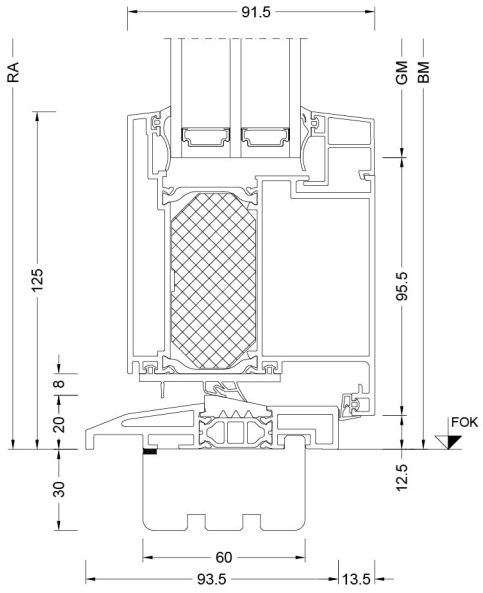

Schnitt seitlich, oben / Section - side top

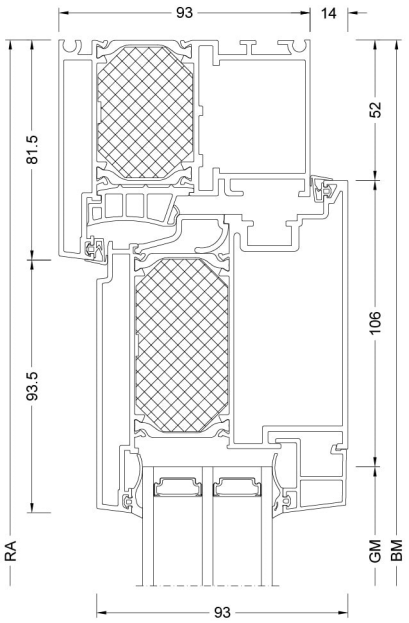

BM	Bestellmaß / Ordering size
FOK	Fußbodenoberkante / Finished floor level
GM	Glasmaß / Glass size
RA	Rahmenaußenmaß / Outside frame size
TM	Teilungsmaß / Division size

Internorm Windows UK Ltd
NW9 OHN London
Unit D, Colindale Business Park, 2-10 Carlisle Road
+44 (0) 20 820 599 91
office@internorm.co.uk