Internorm
Windows – Doors

HT 400 TIMBER-ALUMINIUM-FRONT DOOR



CHARACTERISTICS

Thermal insulation (in W/m²K)
U_D up to 0,67

Sound reduction (in dB)
up to 34

Security
up to RC2

Locking
Multi-locking

Profile depth (in mm)
85



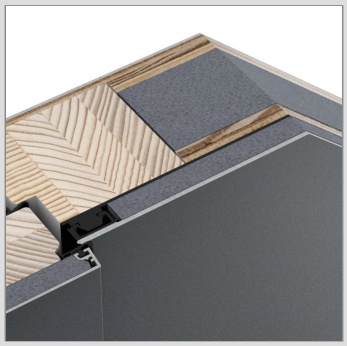



The design of the entire door sash is flush with a square edge towards the frame. Timber, aluminium and highly insulating thermal foam deliver an outstanding composite door solution. The weather-resistant aluminium cladding on the outside and the warmth of timber on the inside create a perfect Standard 5-point locking provides maximum security.

TIMBER-ALUMINIUM-FRONT DOOR

HT 400

Cuts

Schnitt unten / Section - bottom

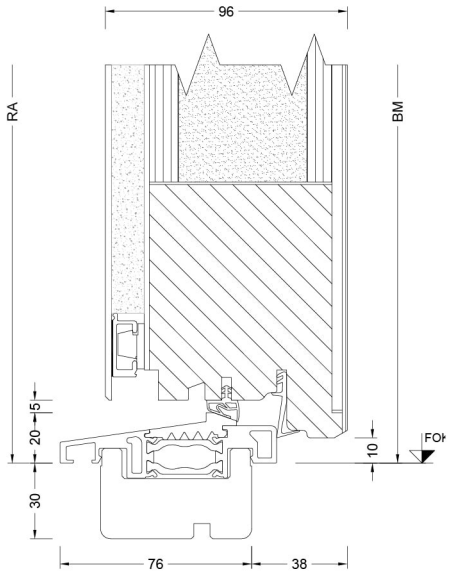

Schnitt seitlich, oben / Section - side top

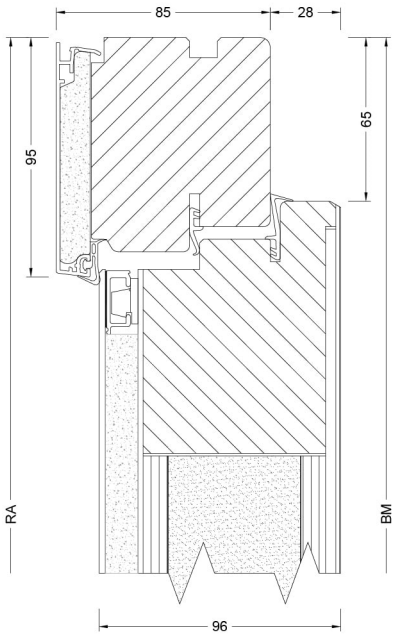

BM	Bestellmaß / Ordering size
FOK	Fußbodenoberkante / Finished floor level
GM	Glasmaß / Glass size
RA	Rahmenaußenmaß / Outside frame size
TM	Teilungsmaß / Division size

Internorm Windows UK Ltd
NW9 OHN London
Unit D, Colindale Business Park, 2-10 Carlisle Road
+44 (0) 20 820 599 91
office@internorm.co.uk