ConceptPatio 130

Lift-Slider and Slider Systems



Newbridge Avenue, Dublin, Ireland: Plus Architecture / Photographer: Donal Murphy

Reynaers Aluminium

With 60 years of global product development, 7 testing centres worldwide and products that are easy to fabricate and install, you can be reassured with Reynaers Aluminium.

Together for better

www.reynaers.co.uk

Reliable performance at all times

With **ConceptPatio 130**, you can choose between a versatile lift-and-slide or inline sliding system that can handle all your standard building needs. Its quality-for-money design and reliable performance makes it the perfect solution for new builds or renovation projects.
ConceptPatio 130 guarantees easy access and effortless opening, thanks to its optimised ergonomic design. Choose between various opening types - including an Open Corner design - or add a renovation-friendly threshold solution to optimise your design.
What's more, you can easily combine ConceptPatio 130 with our other aluminium systems to create a complete façade solution.

Quality for money guaranteed

ConceptPatio 130 is an ideal solution for double glazing units in both renovation and new-build projects. Combining reliable quality and a competitive price-feature mix, the trusted lift-and-slide and inline sliding systems come in a variety of user-friendly configurations, adapting effortlessly to contemporary architectural needs. Whether you are upgrading an existing space or adding a fresh new touch to your home, ConceptPatio 130 is a trustworthy solution.

Range of design options

ConceptPatio 130 has been built upon for over 20 years to offer a complete range of design features. From Monorail to Multirail solutions, high insulation upgrades, Slim Chicane aesthetics, multiple hardware options, and even PAS 24 burglarproof protection, we have an answer for your specific project needs.

Entry-level sliding solution for your projects

ConceptPatio 130 is a tried-and-tested solution which enables fast and easy fabrication in the workshop, and equally efficient installation on site. Thanks to its limited production costs and wide availability, ConceptPatio 130 presents a hard-to-beat offer compared to most competitor systems.

ConceptPatio 130 Options

Slim chicane

With a slimmer central profile, you create even larger glass surfaces to let in a maximum of natural light. Enjoy the sunshine, without compromising the system's stability or strength.

Concealed drainage

Thanks to this concealed drainage solution, you no longer need plastic cover caps to hide drainage holes. As a result, you always enjoy clean lines, minimalistic design, and excellent performance as the water flows away.

Softclose

As you close your aluminium system, the moving vent slows down for the last few centimetres to prevent it from slamming against the frame or crushing any obstacles. It is a convenient feature for additional peace of mind.

Glass Corner

Our glass-to-glass joinery connections enable wide panoramas without profiles obstructing your view. High-quality performance and unique design guaranteed in one solution.



Newbridge Avenue - Dublin, Ireland
Plus Architecture
Photo: Donal Murphy

Design

When you choose ConceptPatio 130, you get a complete and versatile solution with endless design options. Customise your lift-and-slide or inline sliding doors with different opening types and vent configurations, multiple insulation variants and threshold solutions, various handle options, and over 400 colours and finishing types to choose from. Affordable high-quality design, exactly how you want it - ConceptPatio 130 can do it all.



Amani Spaces - Belgium
Photo: Bruno Claeys; Cafeine

Safety

ConceptPatio 130 is always a safe choice, in every sense of the word. The lift-slider and slider systems have been tested and approved to offer RC2 and PAS24 certified burglarproof protection. But your safety is ensured in every-day usage too. Softclose technology prevents objects from getting crushed when the vent is closing, while a glass balustrade, attached from the outside, provides added safety when the system is installed as a façade solution at great heights.

ConceptPatio 130
General information

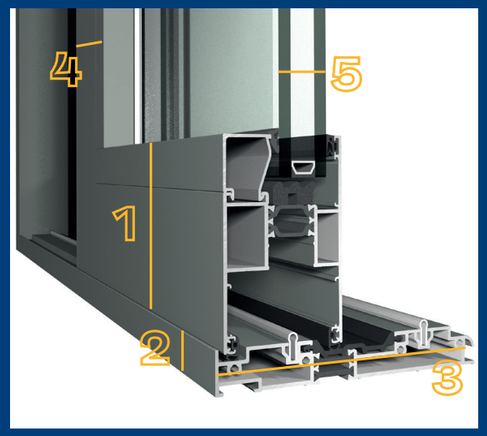

Visible dimensions (mm)

Lift-Slider 2-rail Renovation Threshold

1	Vent height	94
2	Frame height	20
3	Frame depth	139
4	Meeting section	50-98
5	Glass thickness	Up to 45

Possible vent sizes (mm)

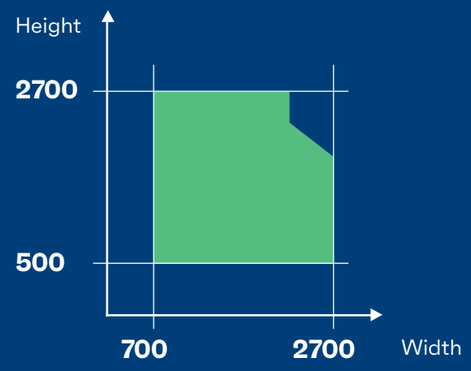

Maximum vent weights (kg)

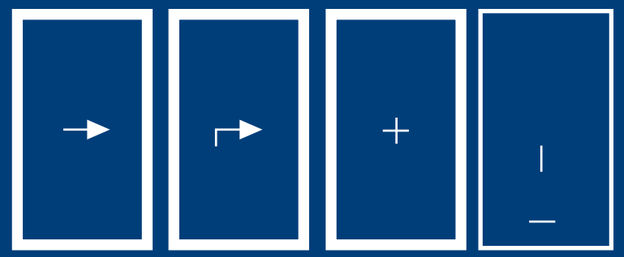

Slider vent	Lift-slider vent	Fixed vent	Fixed monorail
300	300/400*	300	500

*400kg for Lift-Slider Monorail Outside Glazed

Get in touch

Looking for more in-depth technical information? Contact your Reynaers Aluminium representative or scan the QR code to visit our website.



ConceptPatio 130 Variants

Lift-Slider 2-rail

Thermal value - Uw (W/m²K)	Down to 1.4
Water tightness	9A (600 Pa)
Wind load resistance	B5 (2000 Pa)
Burglarproof	RC2 / PAS24



Lift-Slider Monorail Outside Glazed

Thermal value - Uw (W/m²K)	Down to 1.4
Water tightness	E750 (750 Pa)
Wind load resistance	B5 (2000 Pa)
Burglarproof	RC2



Slider 2-rail

Thermal value - Uw (W/m²K)	Down to 1.4
Water tightness	8A (450 Pa)
Wind load resistance	B5 (2000 Pa)
Burglarproof	RC2 / PAS24



More variants can be found on our website...

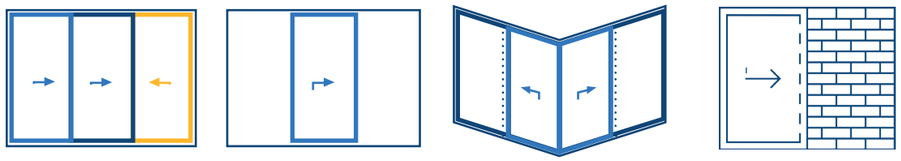

Performance levels, dimensions and properties depend on size, profile combinations, hardware and infill choices. Please contact your Reynaers Aluminium representative for your ideal solution.

ABOUT REYNAERS ALUMINIUM

"Our goal is to increase the value of buildings and to enhance the living and working environment of people worldwide."

As a part of the Reynaers Group, Reynaers Aluminium is a leading specialist in the development, distribution and commercialisation of innovative and sustainable aluminium architectural solutions. These include a wide variety of window and door systems, curtain walls, sliding systems, and conservatories. Besides the extensive range of standard solutions, we also develop customised solutions, tailored to the individual customer or project.

Reynaers Aluminium was founded in 1965 and currently employs over 2,600 people in over 40 countries worldwide, exporting to more than 70 countries on 5 continents.

The company's success is strengthened by our close partnership with 5,000 partner fabricators, architects, and project developers worldwide. This unique cooperation reflects in our motto: Together for better.

At the Reynaers Campus, we focus on sharing knowledge and experience with architects, fabricators, contractors and other building partners while inspiring with new technologies. Next to the Technology, Training and Automation Centre, the Reynaers Campus also has its own Experience Centre where future buildings can be explored in our virtual reality room Avalon.

Reynaers UK has an Knowledge Centre based in Birmingham that offers in-house training for our customers.

For more information: www.reynaers.co.uk

Reynaers Aluminium

111 Hollymoor Way,
Northfield, Birmingham
B31 5HE

T +44 (0) 121 421 1999
reynaersltd@reynaers.com

www.reynaers.co.uk