ALTITUDE ALUMINIUM

WORLD LEADING ALUMINIUM WINDOWS AND DOORS



Roof Lanterns

Bring the outdoors in with our stylish, high-quality rooflights. Designed to flood your home with natural daylight, they create brighter, more spacious and welcoming interiors. Combining contemporary design with excellent thermal performance, our rooflights are the perfect finishing touch for modern living.

Engineered for performance

Expertly designed to minimise the number of parts, maximising the ease of fitting, for efficiency now and throughout the lifetime of the lantern.

Precision design removes the need for sealants in installation, apart from the contact of the kerb bar to the builders upstand.

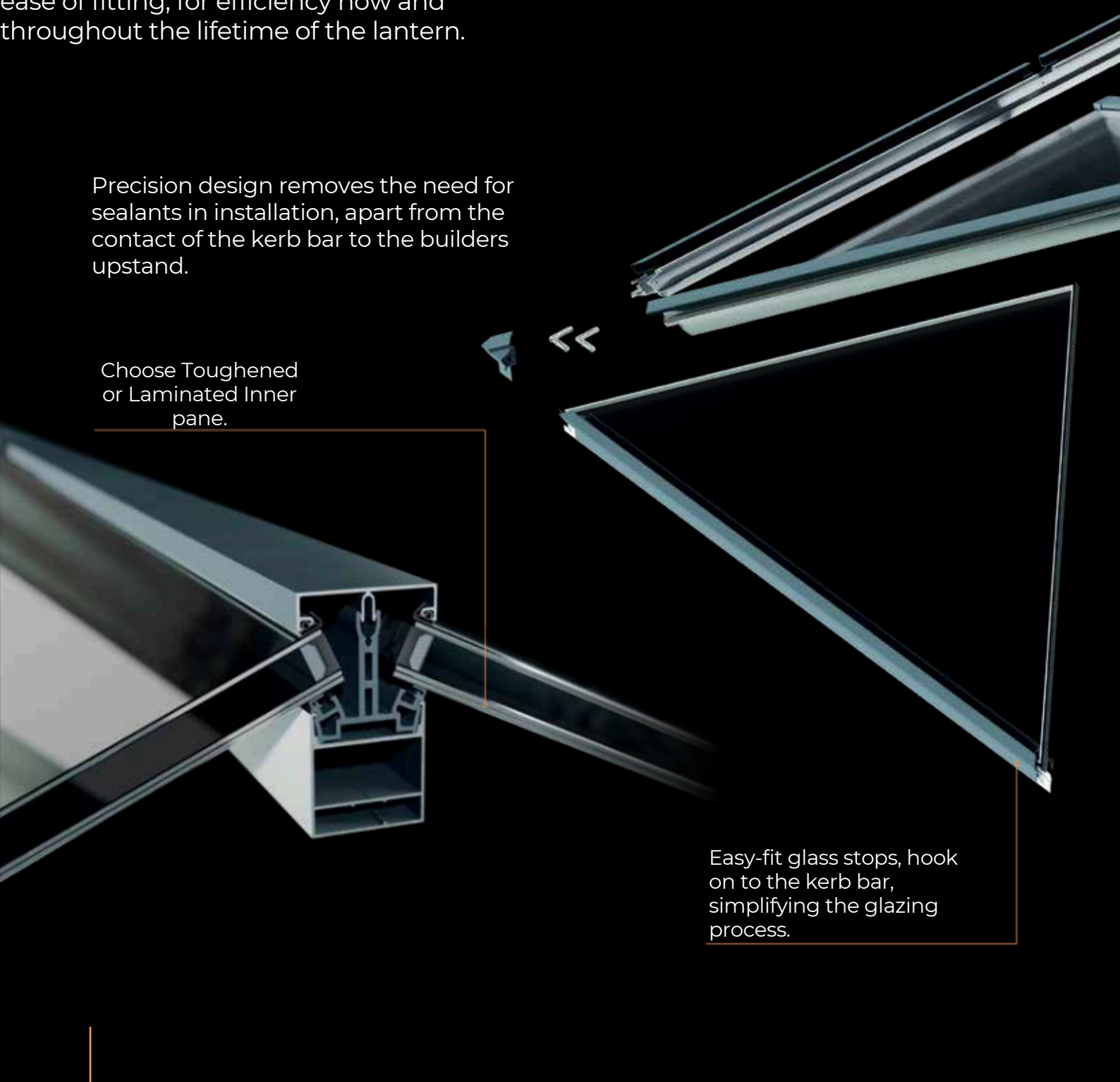

Innovative base frame design, provides an effective drip edge for superior weathertightness.

Precision castings at all junctions provide premium appearance, strength, weathertightness and security.

Super slim bar depth of just 60mm, maximises the light transmission into the space below.

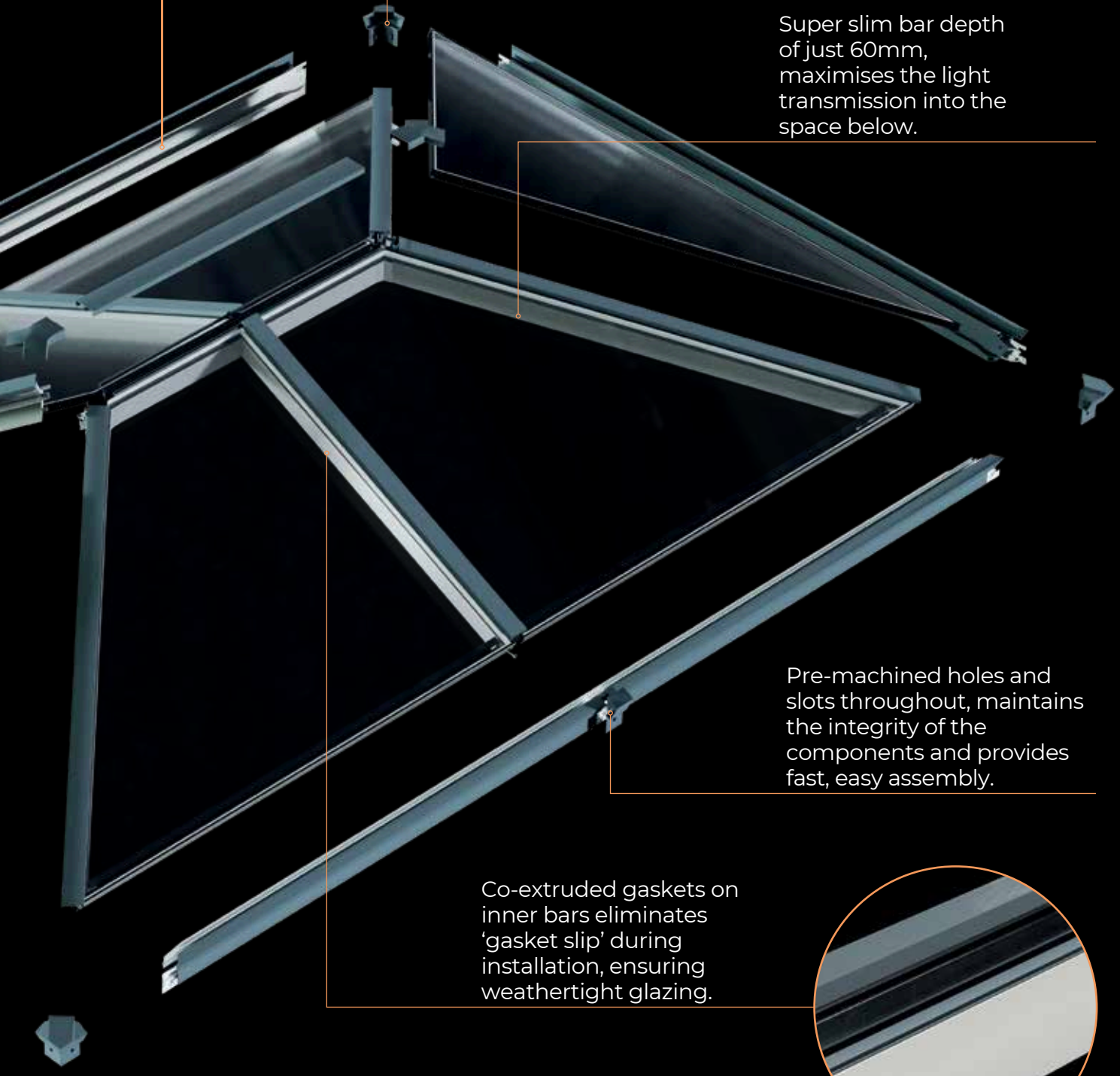

Pre-machined holes and slots throughout, maintains the integrity of the components and provides fast, easy assembly.

Co-extruded gaskets on inner bars eliminates ‘gasket slip’ during installation, ensuring weathertight glazing.

ROOF LANTERN

This Roof Lantern is a hassle free way to improve the amount of daylight reaching your living area.

By reducing the number of parts required and the need for sealants within the lantern, we have simplified the installation process for a low maintenance, weathertight solution. We offer an optional laminated inner pane for enhanced overhead protection.

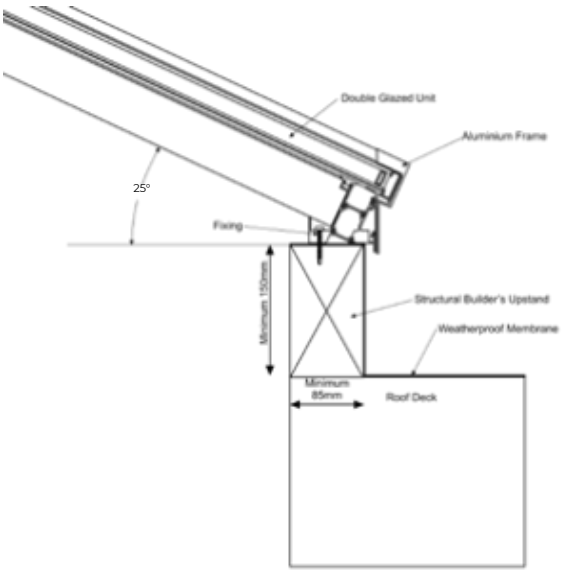

Innovative product design facilitates simple but effective, watertight installation.

Precision aluminium castings Slender aluminium frame

Available in clear or blue solar control glazing options with self-clean coating



Designed for the extremes of UK weather

Low-E insulated double glazing

Aluminium frame powder coated internally and externally in combinations of RAL 7016 grey, RAL 9010 white and RAL 9005 black

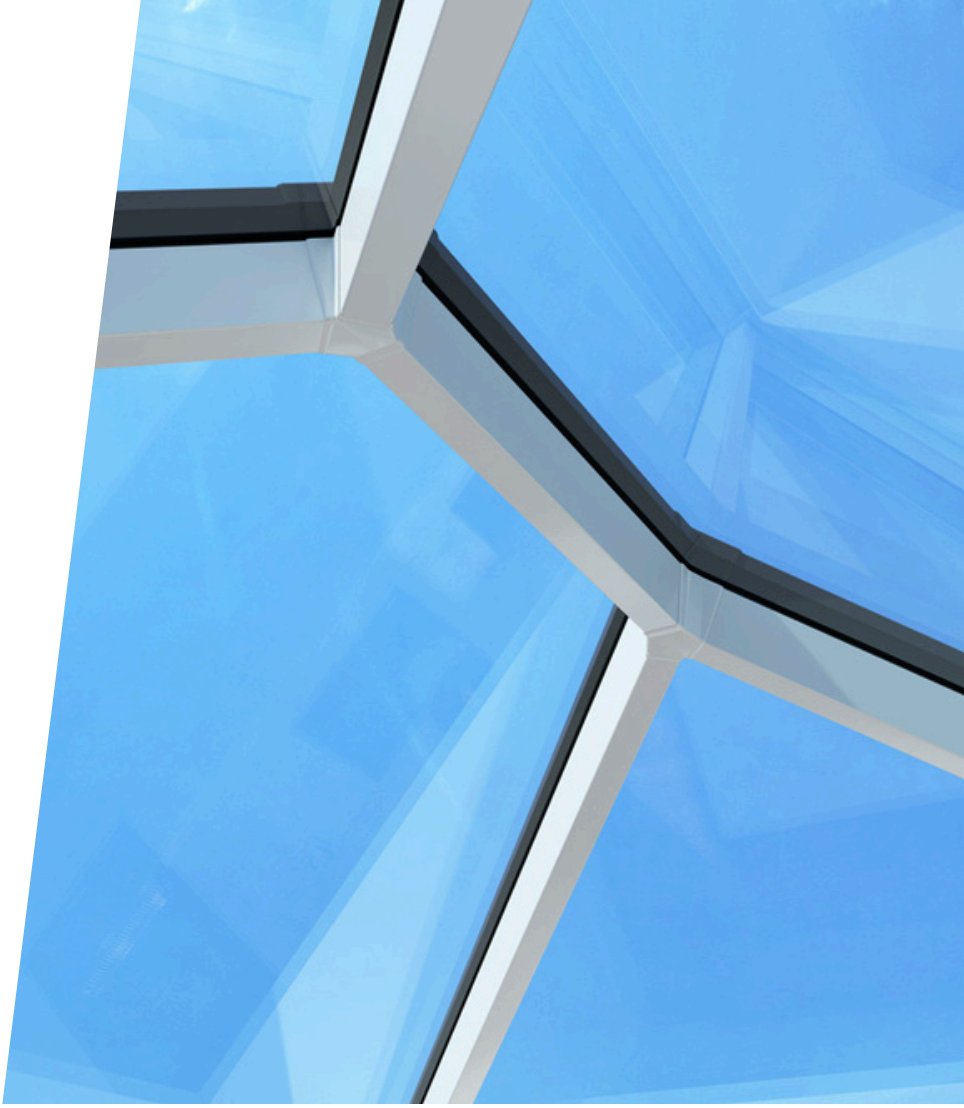

Specifications

- Bespoke sizes up to 6m x 4m
- Fixed 25˚ pitch
- 28mm double glazed units
- Largest rectangular lantern with only 4 glass units: 3m x 2.5m (external size)
- Largest overall rectangular lantern size: 6m x 4m (external size)
- Largest Pyramid lantern with only 4 glass units: 2.5m x 2.5m (external size)
- Largest Pyramid lantern: 4m x 4m (external size)

Available configurations

This Roof Lantern offers a range of options to suit your specific requirements. Different sizes and finishes with various glazing options, you can create a roof lantern that perfectly complements a projects unique style and architecture.

Configurations are available in pyramid and rectangular designs.

With Altitude, you have the freedom to personalise your living space and make it your own.

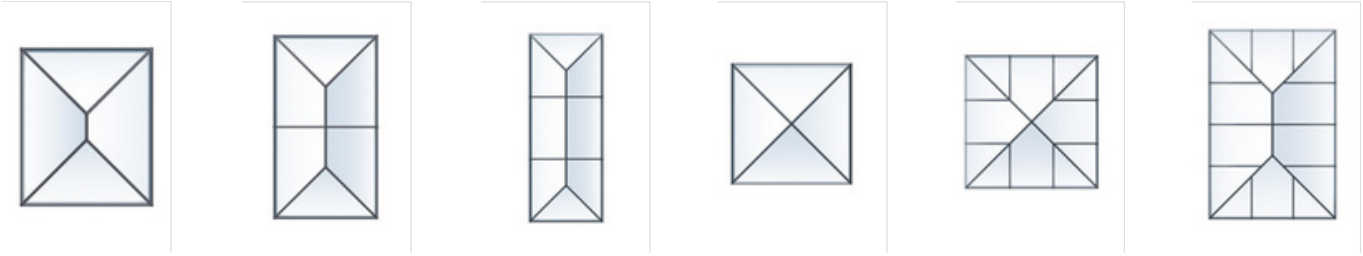

Colour options

- Three stock RAL colours
  - RAL 9910 – Gloss White
  - RAL 7016 – Matt Grey
  - RAL 9005 – Matt Black
- Dual colour available at no extra cost when selecting two stock colours
- Bespoke RAL and BS colours available

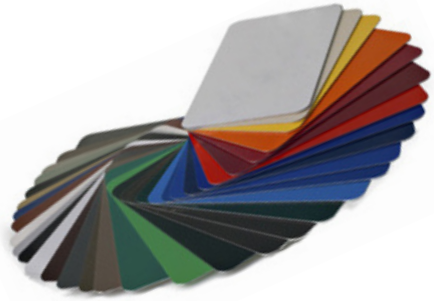



BESPOKE COLOURS AVAILABLE

Performance, self cleaning glazing options

All double glazed units are 28mm, argon gas filled sealed with a sleek warm edge spacer bar.

If the position of the roof lantern is south facing with direct sun, consider a glass type with a higher percentage of solar heat reflection and lower light transmission percentage to reduce solar gain.

U Values explained

The U Value is the rate at which heat is conducted across an insulated glass unit. The lower a number, the better a glass unit is at resisting heat transfer.

	CLEAR	NEUTRAL	BLUE	PREMIUM AQUA	PREMIUM BLUE	PREMIUM CLEAR
U Value (W/m^2K)	1.2	1.2	1.2	1.0	1.0	1.0
Solar heat reflection	31 %	59 %	73 %	82 %	83 %	38 %
Light transmission	77 %	44 %	32 %	28 %	23 %	70 %

Laminated and Privacy glass options available.

ALTITUDE ALUMINIUM

world leading aluminium windows and doors



Altitude Aluminium offer a wide range of Aluminium products for todays Grand Design Projects including:

Aluminium Windows Timber Windows Composite Windows Sliding Doors
Folding/Bifolding Doors Curtain Walling

Balconies Balustrades Rooflights Roof Lanterns

Altitude Aluminium Access House Aviation Park Flint Road Chester CH4 0GZ

www.altitudealuminium.co.uk

01244 529199

quote@altitudealuminium.co.uk