Daylight for living



Brett Martin

Choose Light

Don't compromise on quality



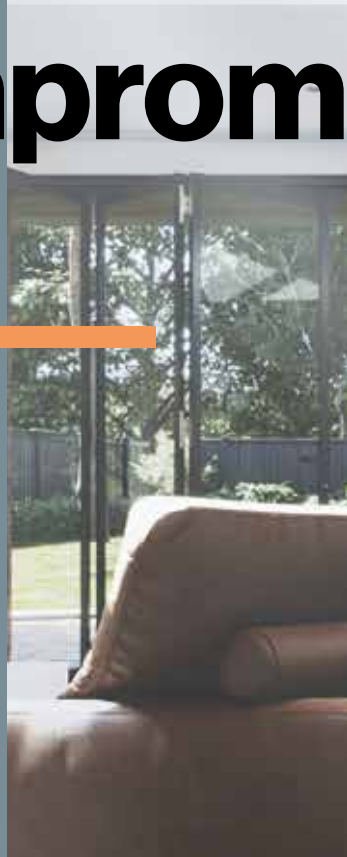

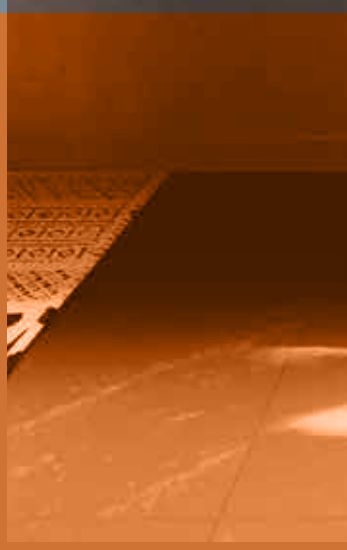

Brett Martin's sophisticated range of flat glass rooflights and roof lanterns add light and life to your home, with the peace of mind that comes with dealing with a leading UK expert in daylight systems. We are passionate about the impact of natural light on living spaces and the positive impact it has on the lives of those making their home there.

Our vast experience in creating daylight systems in every conceivable setting brings a depth of expertise shared by few, making us the ideal source for the right solution to add value to your homes.

MADE IN UK

ise



Safer Choices



Because we care about the safety of our users, we make laminated glazing available either as standard or an option for every rooflight.

Although it costs a little more, the Rooflight Association recommends laminated glazing as the first choice for rooflight installations, providing enhanced overhead protection when compared to standard toughened safety glass.

For more information on the important considerations when choosing between toughened or laminated glass, please contact us or visit: **www.rooflightassociation.org**.

THE FIRST CHOICE FOR SAFETY WITH OVERHEAD GLAZING

LAMINATED INNER PANE

ENDORSED BY THE ROOFLIGHT ASSOCIATION

BS EN 14449



Choose your *style*

Brett Martin produces a daylight system for every application and home style.

Whether adding space to a period terrace, creating indoor/outdoor living in a family home or building your grand design, we have a suitable solution to fill your property with daylight.

To simplify your build, our glass rooflights are available in just days from a wide range of standard sizes which satisfy most projects. Should you require a bespoke solution, however, our customer service team will handle your enquiry promptly.

Our products are designed and manufactured in the UK to exceed the latest standards for energy efficiency, safety and technical performance.

Our team is always available and happy to help you find the optimum rooflight for your home.

With a 10 year warranty available across the range, you can enjoy extra peace of mind when you choose Brett Martin.

10 YEAR WARRANTY AVAILABLE

Roof Lantern

Add visual interest to key living and dining areas with a choice of contemporary 4 panel Lantern or a more traditional 6 panel configuration, complementing any style of property.

Available in sizes up to 3000mm x 2000mm.*

Bespoke sizes also available.

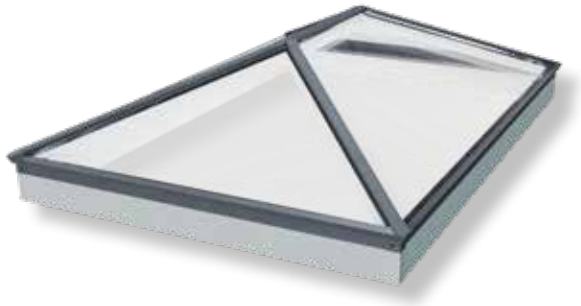

Roof Lantern Pyramid

A striking version of the traditional Roof Lantern which can serve as a focal point in living spaces.

Available in sizes up to 2500mm x 2500mm*

Bespoke sizes also available.



Flat Glass

Ideal for modern living the Flat Glass range can be installed in single large square or rectangular formats or as a group of smaller rooflights.

Available in sizes up to 3600mm x 1650mm with options available for openings and ventilation.*



Circular Glass

An interesting option to provide central feature daylighting or as a striking way to counteract darker areas.

Available in sizes up to 1500mm diameter.*



Glass Link

The options are endless for this continuous modular rooflight system, creating multiple design features for larger projects.

Available in spans of up to 3800mm, with options for opening ventilation.*

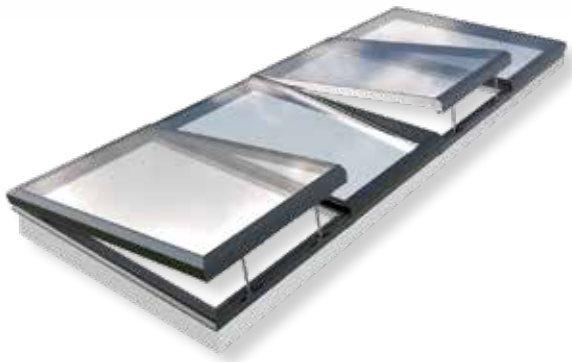

*Image shown with 'Builder's Upstand' (not supplied).

Lantern



Brett Martin brings roof lanterns to a new level.

With slimline profiles, the Brett Martin Roof Lantern's ultra fine detailing provides an attractive appearance whilst allowing more daylight to penetrate your living space.

With standard sizes of up to 3m x 2m available as well as bespoke options, this stylish roof lantern can transform even the most substantial of extension projects.



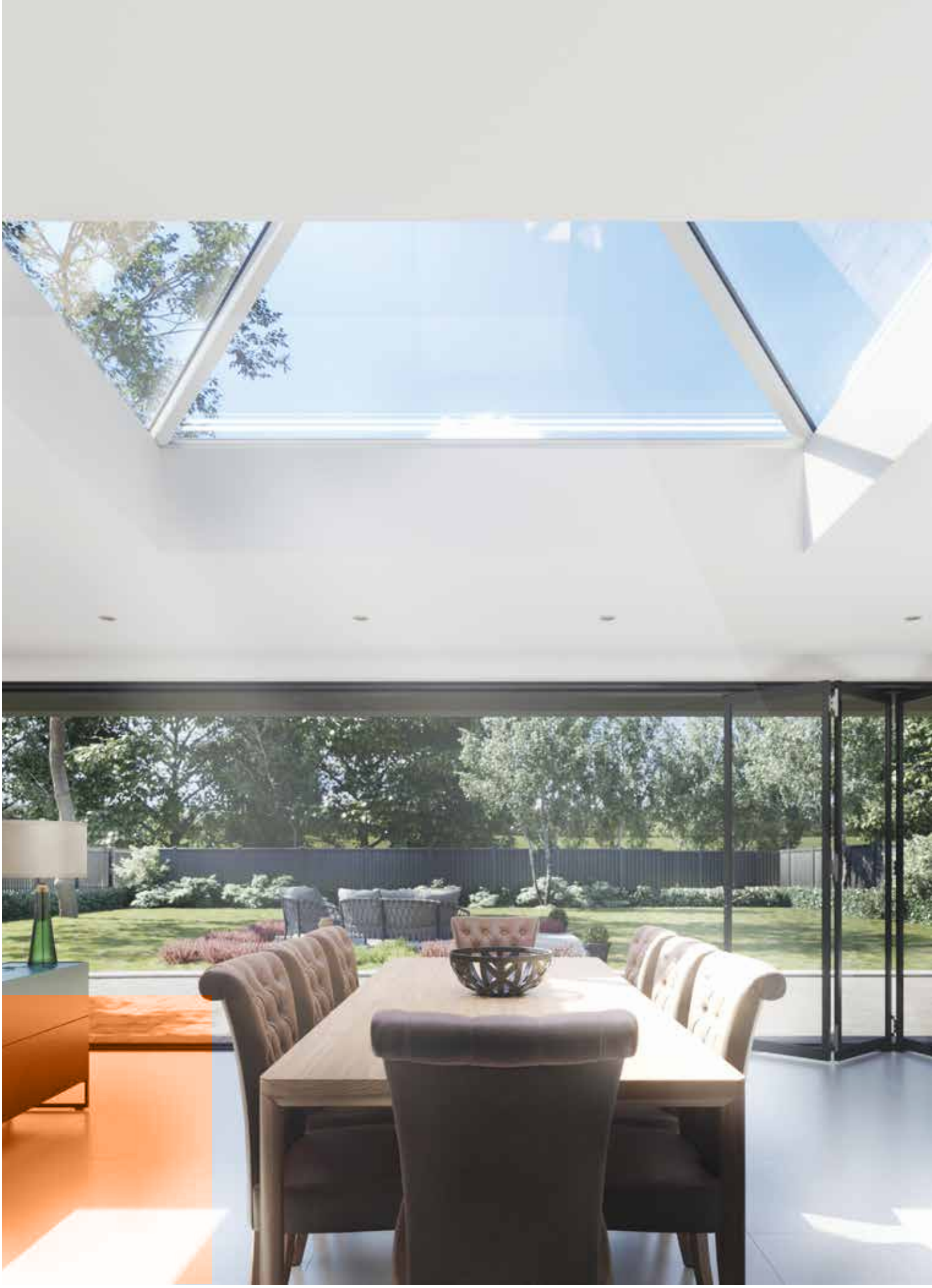





MORE LIGHT, YOUR WAY.

The natural light provided by a Brett Martin Roof Lantern is an essential addition to extended living areas, enhancing the quality of your space, letting you access the proven benefits of exposure to daylight and a connection with the natural environment.

Choose to add light in a way which suits your property, with a variety of sizing and glazing options available.

Brett Martin's Contemporary 4 panel roof lantern design minimises the structure to maximise the daylight, while our Classic 6 panel design features additional glazing bars for a more traditional style.

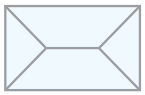

Contemporary
4 Panel Lantern

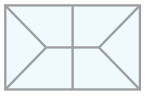

Classic
6 Panel Lantern



4 Pane
Pyramid Lantern

CO-ORDINATE YOUR LIVING SPACE









Our extensive experience in creating daylight systems means that we have the ability to offer you your perfect solution.

Brett Martin Roof Lanterns comes in a variety of square and rectangular formats and are available in clear or blue solar control glazing options with self-clean coating.

The Roof Lantern's slender aluminium frame is powder coated internally and externally in the following colour combinations:

External Frame Colour	Internal Frame Colour
Grey	Grey
Grey	White
White	White
Black	White
Black	Black

*Grey (RAL 7016), White (RAL 9010), Black (RAL 9005)

Bespoke sizes available. Typically delivered in 15-17 days.

Higher Performanc





SAFE
EASY
EFFICIENT



Our roof lantern is designed not only to look better but also to perform better in terms of safety, energy efficiency and lower maintenance.

While some manufacturers do not offer laminated glazing, we support the Rooflight Association recommendation of it being the first choice for overhead applications. For this reason, we offer it as an option in our roof lantern range.

The design of the slimline aluminium profiles has been optimised to work in conjunction with the thermally efficient double glazed units, reducing heat loss, protecting the energy efficiency of your home.

Engineered for performance

Expertly designed to minimise the number of parts, maximising the ease of fitting, for efficiency now and throughout the lifetime of the lantern.

Precision design removes the need for sealants in installation, apart from the contact of the kerb bar to the builders upstand.

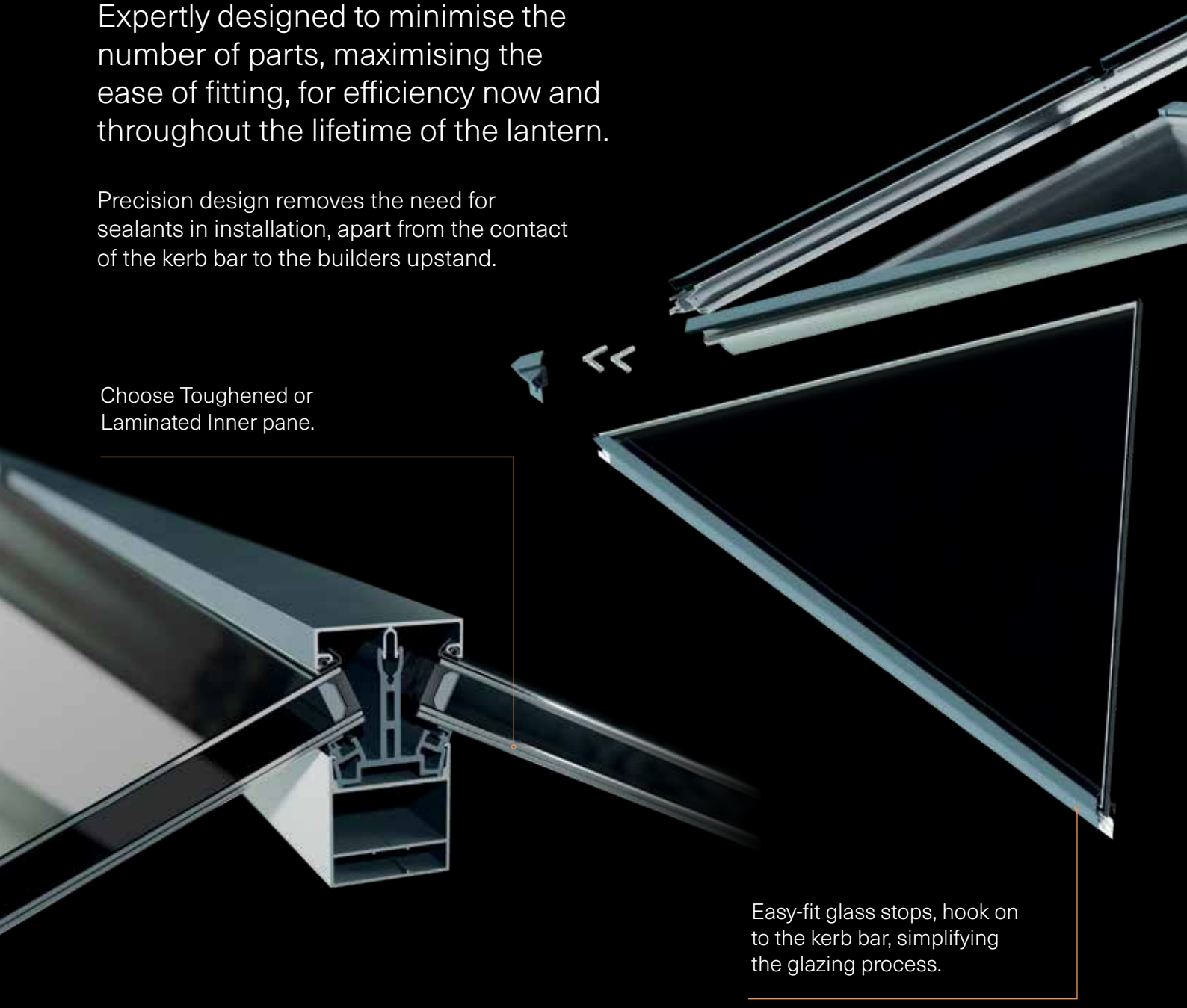

Innovative base frame design, provides an effective drip edge for superior weathertightness.

Precision castings at all junctions provide premium appearance, strength, weathertightness and security.

Super slim bar depth of just 60mm, maximises the light transmission into the space below.

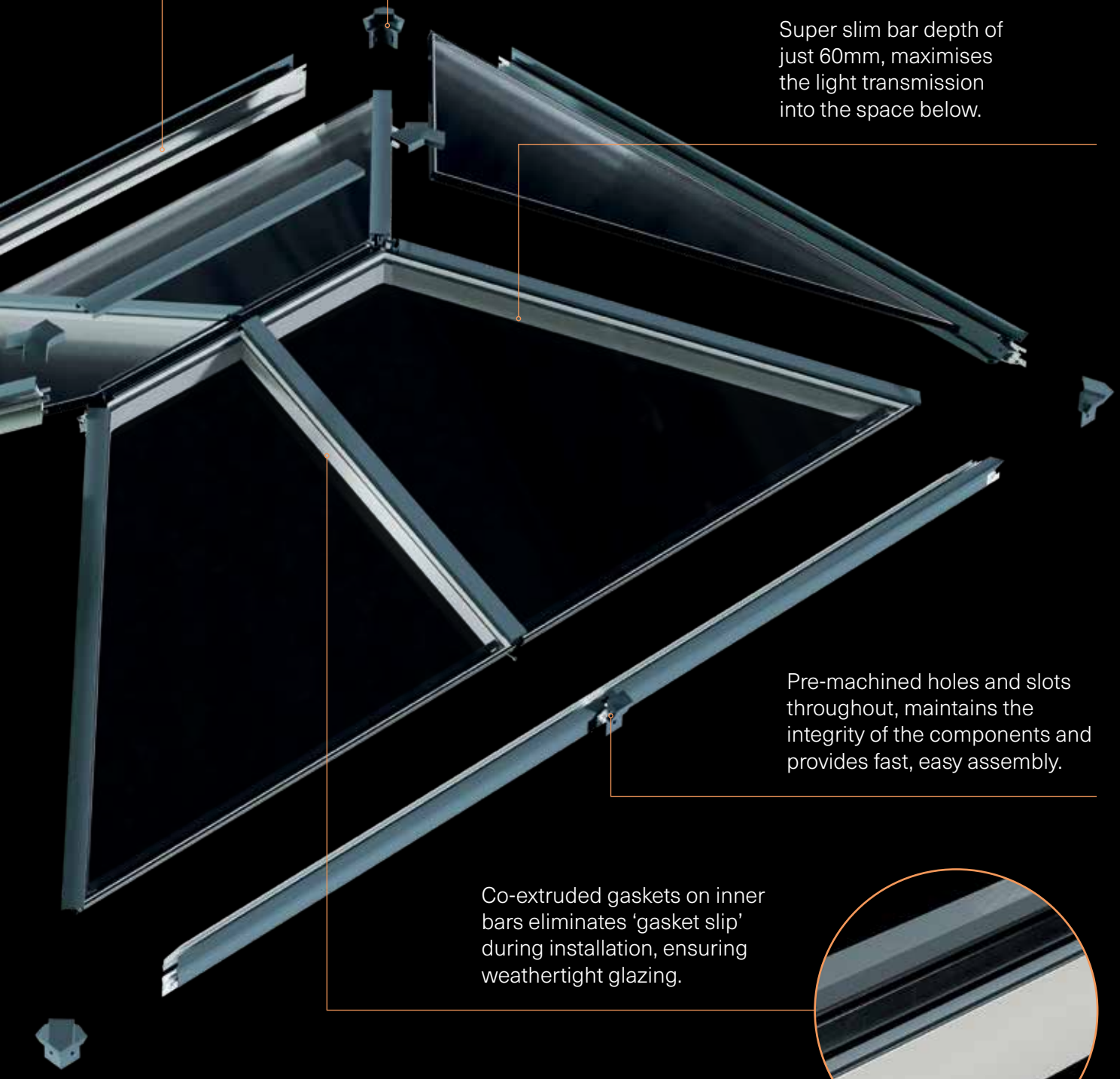

Pre-machined holes and slots throughout, maintains the integrity of the components and provides fast, easy assembly.

Co-extruded gaskets on inner bars eliminates ‘gasket slip’ during installation, ensuring weathertight glazing.

The Brett Martin Roof Lantern is a hassle free way to improve the amount of daylight reaching your living area.

By reducing the number of parts required and the need for sealants within the lantern, we have simplified the installation process for a low maintenance, weathertight solution. We offer an optional laminated inner pane for enhanced overhead protection.

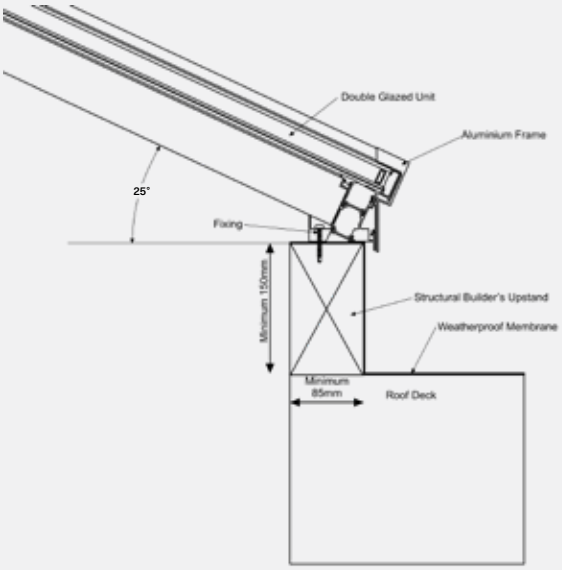

Innovative product design facilitates simple but effective, watertight installation.

Precision aluminium castings

Slender aluminium frame

Available in clear or blue solar control glazing options with self-clean coating

Low-E insulated double glazing

Aluminium frame powder coated internally and externally in combinations of RAL 7016 grey, RAL 9010 white and RAL 9005 black

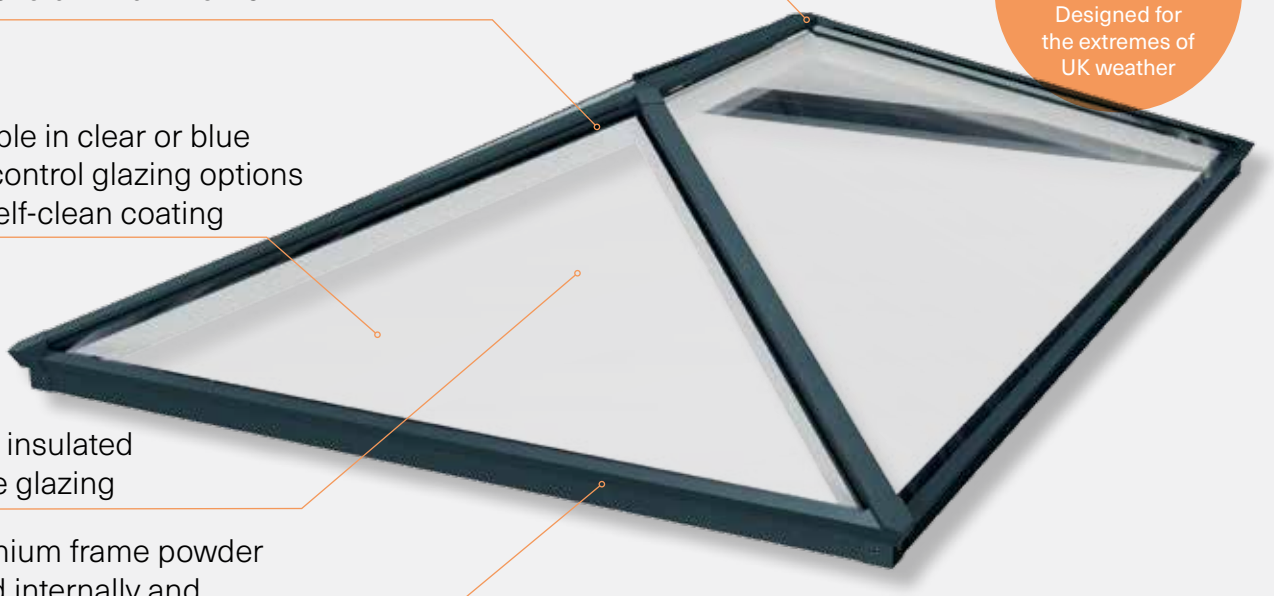

Designed for the extremes of UK weather

LAMINATED INNER PANE ENDORSED BY THE ROOFLIGHT ASSOCIATION

1.2 W/m²K U-VALUE

Glazing (Vertical)

10 YEAR WARRANTY AVAILABLE

PRODUCT OPTIONS

Standard Sizes

Contemporary 4 Panel Lantern

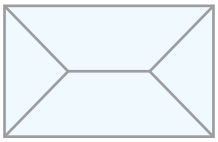

1500mm x 1000mm
2000mm x 1000mm
2000mm x 1500mm
2500mm x 1000mm
2500mm x 1500mm
2500mm x 2000mm
3000mm x 1000mm
3000mm x 1500mm
3000mm x 2000mm

Classic 6 Panel Lantern

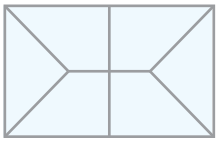

1500mm x 1000mm
2000mm x 1000mm
2000mm x 1500mm
2500mm x 1000mm
2500mm x 1500mm
2500mm x 2000mm
3000mm x 1000mm
3000mm x 1500mm
3000mm x 2000mm

Glazing Specification

Standard
- Toughened inner pane

Optional
- Laminated inner pane

Glazing Tints

Standard
- Clear self-clean

Optional
- Blue Solar self-clean

Frame Colour

Aluminium frame powder coated internally and externally in combinations of RAL 7016 grey, RAL 9010 white and RAL 9005 black.

Rapid single point delivery in 3-5 days from order (standard sizes only).

Bespoke Sizes

Bespoke sizes available. Typically delivered in 15-17 days.



Roof Lantern Pyramid



A CAPTIVATING CENTREPIECE





Create a striking focal point in your living space with the Brett Martin Roof Lantern Pyramid.

As with the rectangular lantern, its slimline profiles allow more daylight to penetrate, and its symmetrical design can provide a focused even light in living areas as well as smaller spaces and hallways.

The Roof Lantern Pyramid is available in 4 standard sizes from 1000mm x 1000mm up to 2500mm x 2500mm as well as bespoke options.

The precision in design facilitates easy installation, which means that it is an effective way to transform your living areas.

ROOF LANTERN PYRAMID

The Brett Martin Roof Lantern Pyramid has a contemporary 4 panel design which minimises the structure to maximise the daylight and can serve as a focal point in residential spaces.

Because we care about the safety of our users, we offer optional laminated glazing providing enhanced overhead protection.

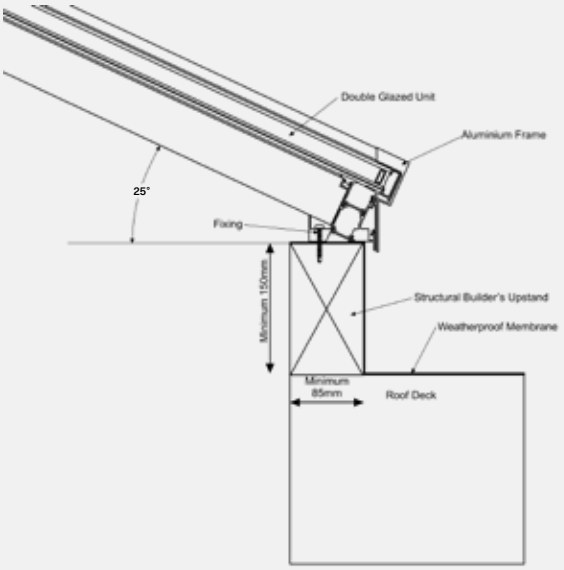

Innovative product design facilitates simple but effective, watertight installation.

Precision aluminium castings and ridge cap

Slender aluminium frame

Available in clear or blue solar control glazing options with self-clean coating



Low-E insulated double glazing

Aluminium frame powder coated internally and externally in combinations of RAL 7016 grey, RAL 9010 white and RAL 9005 black

LAMINATED INNER PANE
ENDORSED BY THE ROOFLIGHT ASSOCIATION

1.2 W/m²K U-VALUE
Glazing (Vertical)

10 YEAR WARRANTY AVAILABLE

PRODUCT OPTIONS

Standard Sizes

4 Pane Pyramid Lantern



1000mm x 1000mm

1500mm x 1500mm

2000mm x 2000mm

2500mm x 2500mm

Bespoke Sizes

Bespoke sizes available. Typically delivered in 15-17 days.

Glazing Specification

Standard
- Toughened inner pane

Optional
- Laminated inner pane

Glazing Tints

Standard
- Clear self-clean

Optional
- Blue Solar self-clean

Frame Colour

Aluminium frame powder coated internally and externally in combinations of RAL 7016 grey, RAL 9010 white and RAL 9005 black.



Flat Glass





THE MODERN ALTERNATIVE





The Brett Martin Flat Glass range is the ideal source of daylight for use in a wide range of applications in modern homes.

Suitable for use as a large central light source over dining or living spaces in square or rectangular formats, they are also ideal for use in multiples in smaller sizes throughout a space for dramatic impact and optimum spread of light.

The stylish minimal design provides a safe yet unobtrusive means of bringing light deep into extended spaces for an enhanced living experience.

Add an additional source of fresh air to your living space with options for manual and electric opening options or trickle ventilation to maintain a streamline appearance. For further enhancement, choose solar control, tinted or obscured glazing to achieve your desired finish.

Choose Flat Glass for the optimum safe and secure daylighting option.

With a laminated inner pane as standard, we prioritise the safety of your family by ensuring accidental breakage will not lead to falling glass.

Our Flat Glass rooflights achieve Secured by Design accreditation*, ensuring you are kept secure against burglary.

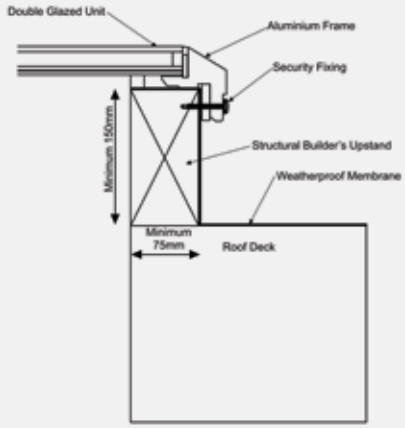

Innovative product design facilitates simple but effective, watertight installation.

Aluminium frame powder coated to RAL 7016 grey or RAL 9005 black

Laminated inner pane

Low-E insulated double glazing

Thermally isolated frame

Clean internal appearance including hidden actuators and cables on powered opening rooflights

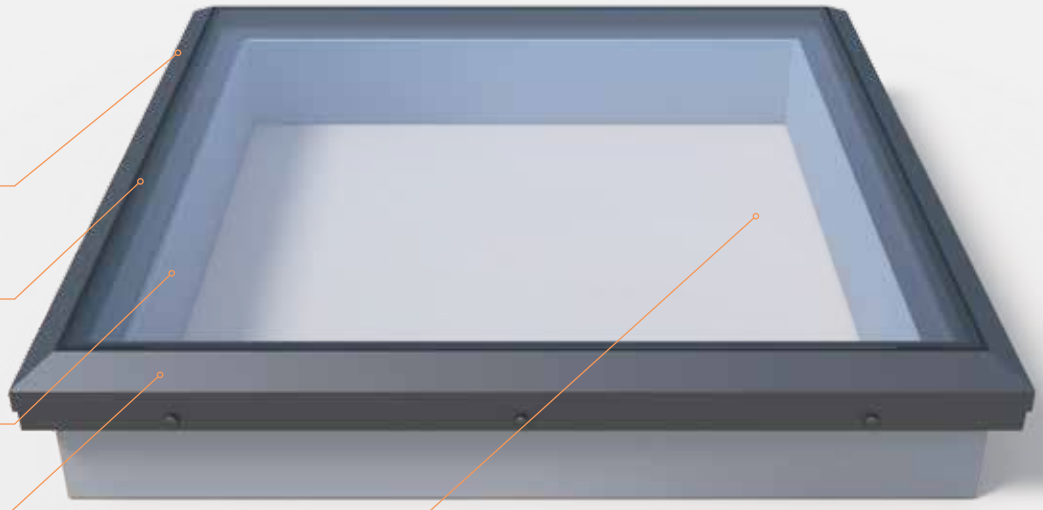

Image shown with 'Builder's Upstand' (not supplied). PVC kerb option available to order.

Secured by Design
Police Preferred Specification
*on fixed options

LAMINATED INNER PANE
ENDORSED BY THE ROOFLIGHT ASSOCIATION

1.1 W/m²K
U-VALUE
Glazing (Vertical)

10 YEAR WARRANTY AVAILABLE

PRODUCT OPTIONS

Sizing Options

Available in over 100 size options and bespoke sizes. Rapid delivery range available in as little as 48 hours in below sizes:

600mm x 600m
750mm x 750mm
900mm x 600mm
900mm x 900mm
1000mm x 1000mm
1200mm x 600mm
1200mm x 900mm
1200mm x 1200mm
1500mm x 1000mm

Specifications

Opening
- Fixed (Secured by Design)
- Manual
- Powered

Ventilation
- Unvented
- Hit & miss
- Auto hit & miss

Kerbs
- No kerb (builder's upstand)
- 150mm uPVC kerb
- 300mm uPVC kerb

Glazing Options

Non standard glazing options are available to order and include solar control, self cleaning and satin obscure glass.

Frame Colour

Aluminium frame powder coated to RAL 7016 grey or RAL 9005 black.



Circular





EXPRESS YOURSELF



Stand out from the crowd with a Brett Martin Circular Glass rooflight.

A contemporary look is achieved with this streamlined circular design featuring a slim and minimalist framework.

Our Circular Glass rooflight provides an interesting option for central feature daylighting or as an overhead addition in darker areas. With diameters available from 600mm through to 1500mm, this premium rooflight range can enhance spaces from small bathrooms through to large living areas.

As well as offering an elegant aesthetic, this solution provides a practical, hassle free experience for your build schedule, with easy installation and maintenance achieved and quick delivery on stock sizes.

Choose Circular Glass to achieve visual impact for modern living spaces.

Choose from a range of sizes and mount onto a builder's upstand or complete with a pre-fabricated insulated GRP kerb.

An optional laminated glass inner pane gives piece of mind for those occupying the space below, ensuring no falling glass if accidentally broken.

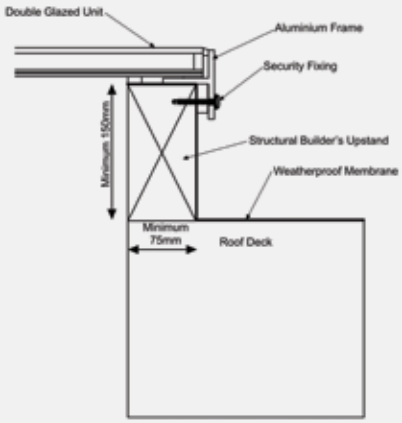

Innovative product design facilitates simple but effective, watertight installation.

Aluminium frame powder coated to RAL 7016 grey

Low-E insulated double glazing

Thermally isolated frame

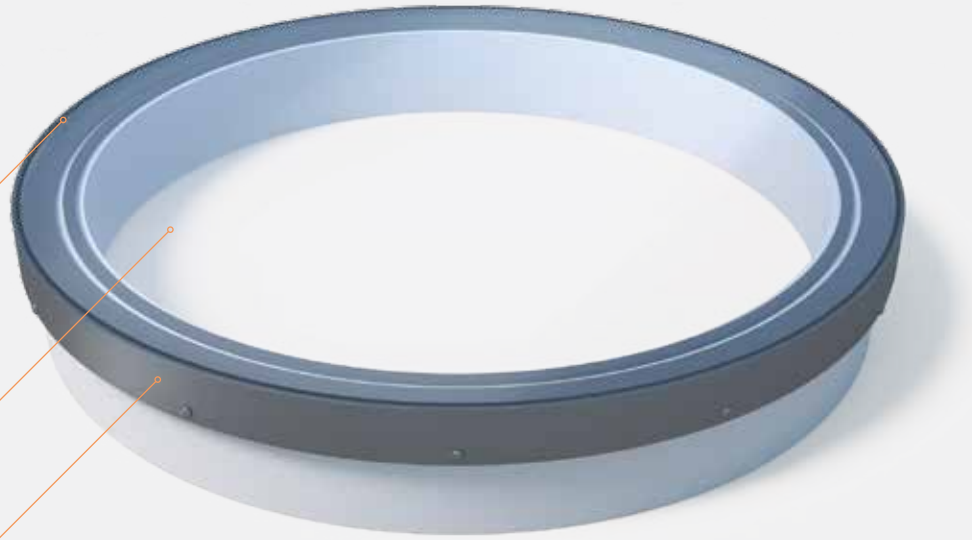

Image shown with 'Builder's Upstand' (not supplied). GRP kerb option available to order.

LAMINATED INNER PANE ENDORSED BY THE ROOFLIGHT ASSOCIATION

1.1 W/m²K U-VALUE
Glazing (Vertical)

10 YEAR WARRANTY AVAILABLE

PRODUCT OPTIONS

Sizing Options

600mm
750mm
900mm
1050mm
1200mm
1350mm
1500mm

Options

Glazed unit only
Apply to an existing builder's upstand

Insulated GRP Kerb
150mm height



Glazing

Non standard glazing options are available to order and include solar control, self cleaning and satin obscure glass.

Finish Options

Can be powder coated to any single RAL colour on request.



Glass Link







LIGHT WITHOUT LIMITATION





Design daylight into your dream home with Brett Martin's Glass Link rooflight system.

This elegantly designed continuous modular rooflight offering provides a striking addition to large and linear spaces.

Options are limitless, with spans of up to 3800mm available with individual modules 3800mm x 1750mm allowing for uninterrupted daylight.

Choose from fixed or opening window options or combine a mix of both without altering your streamline look. All modules, including opening options, are flush and deliver a clean, slimline appearance allowing you to maximise natural light with minimal framing.

Glass Link provides the flexible approach to installing daylight into the home.

With a combination of fixed and opening modules available, even the largest of areas can be transformed with natural daylight and fresh air.

Laminated inner panes ensure accidental breakage will not lead to falling glass.

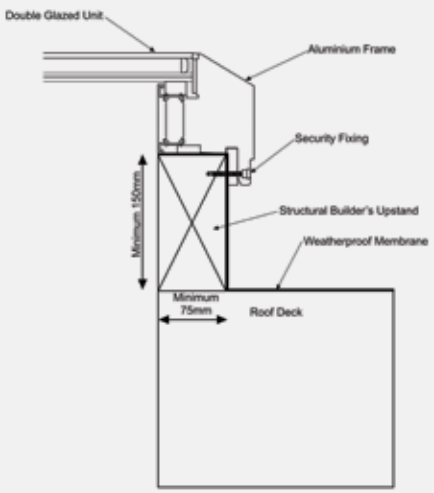

Innovative product design facilitates simple but effective, watertight installation.

Aluminium frame powder coated to RAL 7016 grey externally and RAL 9010 white internally

Laminated inner pane

Flush powered opening modules so fixed and opening modules appear identical

Thermally broken frame

Low-E insulated double glazing

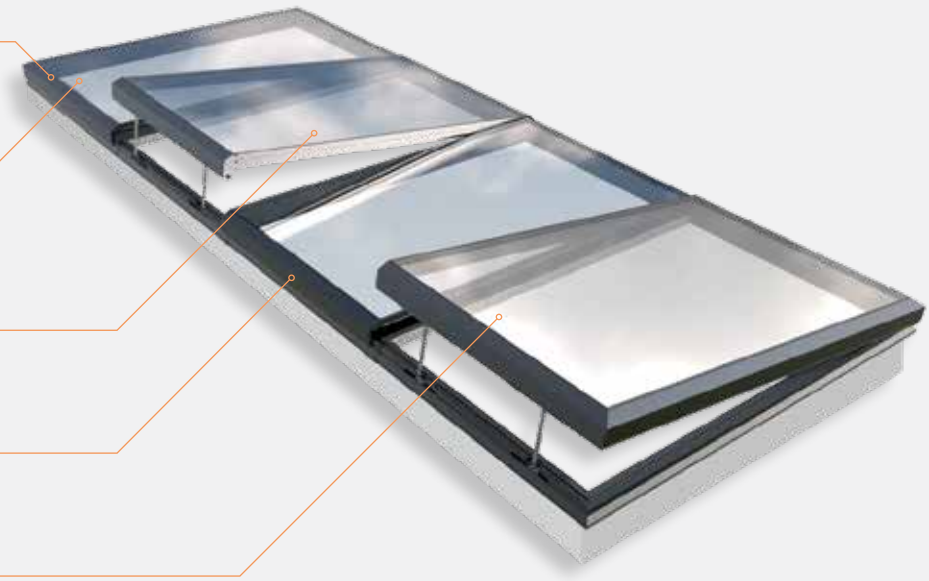

Image shown with 'Builder's Upstand' (not supplied).

Secured by Design
Police Preferred Specification
*on fixed options

LAMINATED INNER PANE
ENDORSED BY THE ROOFLIGHT ASSOCIATION

1.1 W/m²K
U-VALUE
Glazing (Vertical)

10 YEAR WARRANTY AVAILABLE

PRODUCT OPTIONS

Sizing Options

Spans of up to 3800mm available – individual modules of up to 3800mm x 1750mm to allow for uninterrupted daylight.

Size restrictions apply for opening options due to size, wind loadings and weight.

Opening Options

A range of static and opening options available as follows:

- Fixed (Secured by Design)
- Manual opening - pole operated worm drive
- Powered opening - wall-switch (concealed chain actuator)
- Powered opening - remote controlled operation
- Powered opening - rain sensor operation

Glazing Options

Non standard glazing options are available to order and include solar control, self cleaning and satin obscure glass.

Finish Options

Can be powder coated to any single RAL colour on request.



Brett Martin
Daylight Systems Ltd
Sandford Close
Aldermans Green Industrial Estate
Coventry, West Midlands
CV2 2QU

t: +44 (0) 24 7660 2022
f: +44 (0) 24 7660 2745
e: daylight@brettmartin.com

For the latest information visit
brettmartin.com



3017/0425