TB298

Installation of Direct Fix (DF) PVC Kerbs

Information to note
- Kerb may be jointed as shown, or in one piece.
- 125mm kerb-to-upstand fasteners suitable for timber and thin steel are supplied.
- See page 2 for fixing sequence instructions.

1 - Jointed Kerb Assembly Detail

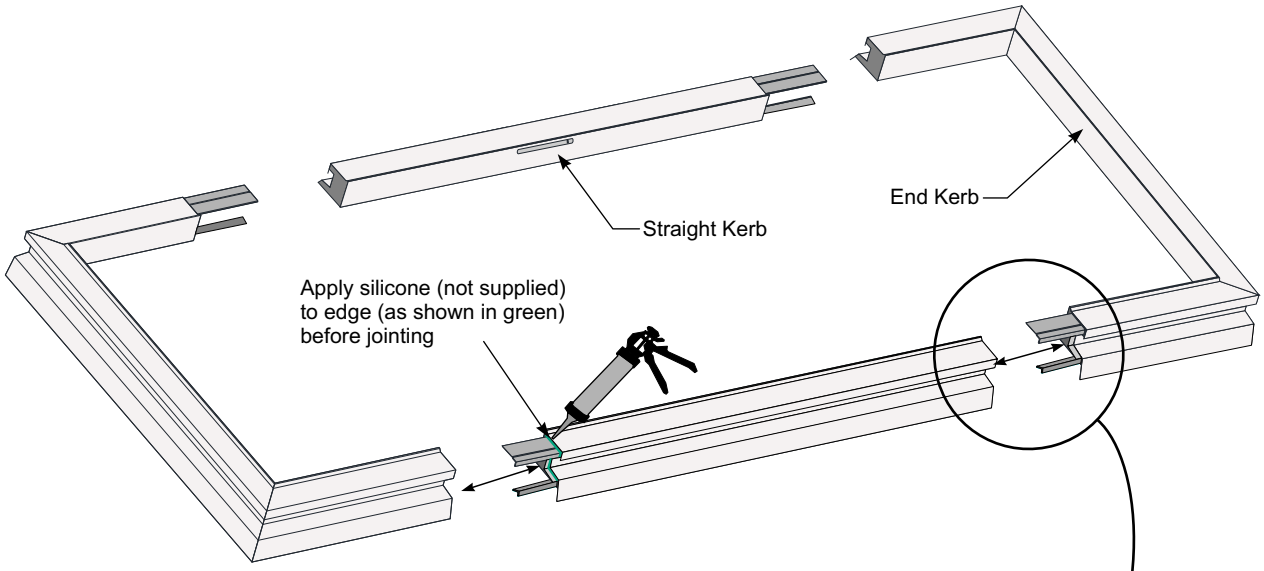

2 - Kerb to Kerb Jointing Detail

Fix using 23mm self-drill kerb assembly fasteners (supplied), evenly spaced between 25mm & 120mm of the kerb joint. Remove washers from screws on the top of the kerb.

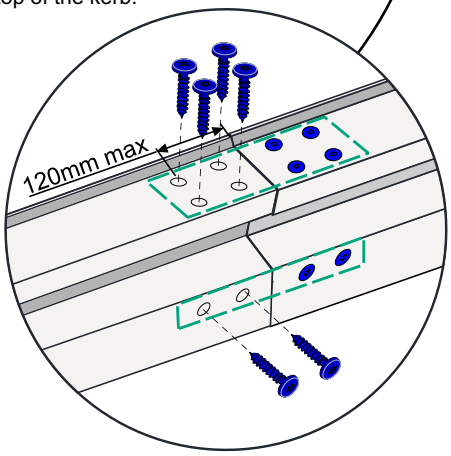

3 - Kerb to Roof Fixing Detail

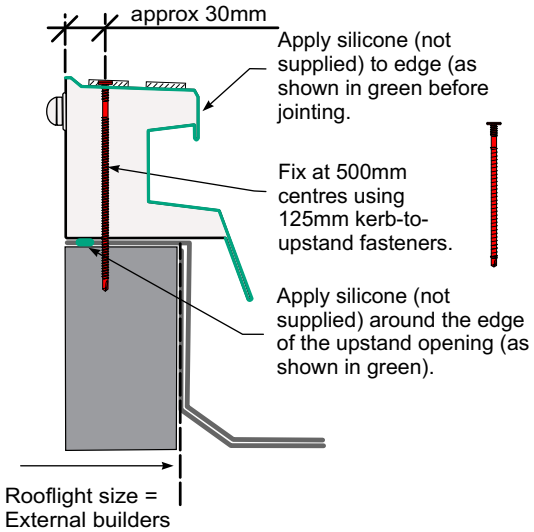

Note
It is essential that these details are followed to ensure the kerb resists thermal stress.

Brett Martin

brettmartin.com

Brett Martin Daylight Systems operates a policy of continuous product improvement, and reserves the right to alter specifications at any time without notice. Every effort has been taken to ensure all details contained in this document are correct at the time of going to press but this document should be used only as a guide and does not in any way form part of a contract or warranty. It is the customer's responsibility to ensure that the product is suitable for the actual conditions of use, which are beyond the control of Brett Martin Daylight Systems.

TB298

Installation of Direct Fix (DF) PVC Kerbs

FIXING SEQUENCE

A. Check the external width and length of the fully weathered builders upstand are correct, the top is flat and level and that it will provide the correct support for the DF kerb and fasteners.

B. Apply silicone around top of builders upstand below kerb. (see detail 3, page 1)

C. Position the kerb, or for longer runs the U-shaped kerb end section, and fix with the kerb-to-upstand fasteners at approx. 500mm centres. (see detail 3, page 1)

D. For longer runs, interlock the straight kerb sections with silicone at the joints (see detail 1 and 2, page 1), and fix kerb to kerb using kerb assembly fasteners (see detail 2, page 1). Then fix the kerb sections to the upstand using kerb-to-upstand fasteners at approx. 500mm centres (see detail 3, page 1) ensuring the kerb is located straight and parallel.

E. Finish the kerb installation by interlocking the final kerb end section into position with silicone at the joints (see detail 1 and 2), and fix kerb to kerb using kerb assembly fasteners (see detail 2, page 1). Then fix the kerb end section to the upstand using kerb-to-upstand fasteners (see detail 3, page 1).

Brett Martin Daylight Systems operates a policy of continuous product improvement, and reserves the right to alter specifications at any time without notice. Every effort has been taken to ensure all details contained in this document are correct at the time of going to press but this document should be used only as a guide and does not in any way form part of a contract or warranty. It is the customer's responsibility to ensure that the product is suitable for the actual conditions of use, which are beyond the control of Brett Martin Daylight Systems.