studio

Internorm
Windows – Doors

HF 520 TIMBER-ALUMINIUM-WINDOW



CHARACTERISTICS

Thermal insulation (in W/m²K)
U_w up to 0,71

Sound reduction (in dB)
up to 35 - 47

Security
up to RC1, RC2

Locking
fully concealed

Installation Depth (in mm)
90

I-tec Glazing

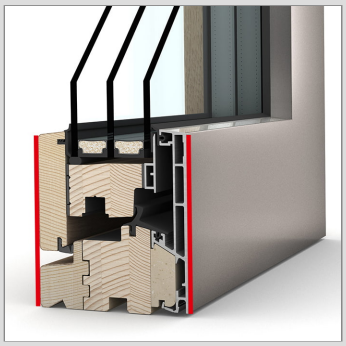



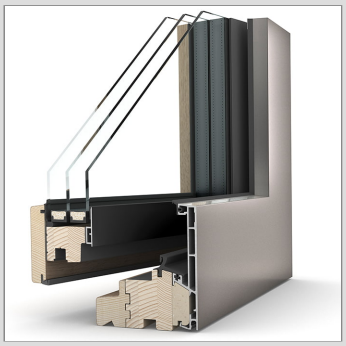

The new timber-aluminium window impresses with its uniquely modern and flush design which appears like fixed glazing. The slim frame also allows maximum natural light to enter the interior. The all-round bonding of the glass pane (I-tec Glazing) ensures excellent stability and burglar resistance. On request, PEFC-certified timber from local, sustainable forests can be specified for the high-quality, stable solid timber core.

TIMBER-ALUMINIUM-WINDOW

HF 520

Cuts

Senkrecht / Vertical

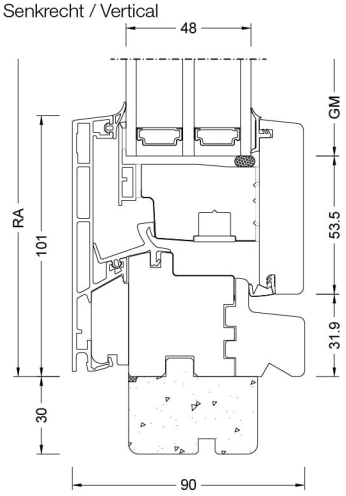

Waagrecht / Horizontal

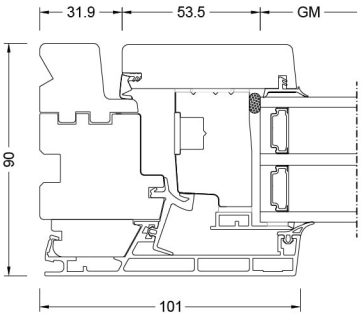

Stulp / Flying mullion

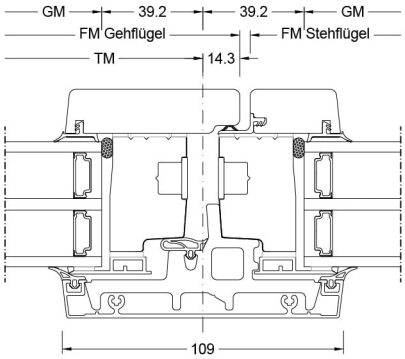

BM	Bestellmaß / Ordering size
FM G	Flügelmaß Gehflügel / Sash size master sash
FM S	Flügelmaß Stehflügel / Sash size slave sash
FOK	Fußbodenoberkante / Finished floor level
GM	Glasmaß / Glass size
RA	Rahmenaußenmaß / Outside frame size
TM	Teilungsmaß / Division size

Values

Glass Build Up	GC	Coating	AH	U_g	g	U_f	Psi	U_w	R_w	C	Ctr	Certificate - Thermal Performance	Certificate - Sound
4b/18Ar/4/18Ar/b4	3N2	Low-Carbon iplus	Iso	0,5	53	1,2	0,035	0,78	35	-1	-5	✓	✓
6b/18Ar/4/16Ar/b4	33U	Low-Carbon iplus	Iso	0,5	52	1,2	0,038	0,78	40	-2	-5	✓	✓
44b.2(VSG-S)/15Ar/4/12Ar/b44.2(VSG-S)	3FH	Low-Carbon iplus	Iso	0,6	47	1,2	0,048	0,88	47	-1	-5	✓	✓
22b.2(VSG)/16Ar/4/18Ar/b22.2(VSG)	3GW	iplus	Iso	0,5	49	1,2	-	-	39	-2	-6	×	✓
4b/15Ar/4/18Ar/b33.2(VSG)	3GL	Low-Carbon iplus	Iso	0,6	52	1,2	-	-	41	-1	-5	×	✓
4b/18Ar/4/14Ar/b44.2(VSG-S)	39K	Low-Carbon iplus	Iso	0,6	52	1,2	-	-	43	-2	-6	×	✓
6b/15Ar/4/14Ar/b44.2(VSG-S)	34P	Low-Carbon iplus	Iso	0,6	51	1,2	-	-	43	-1	-5	×	✓

Internorm takes responsibility for the environment and climate

Internorm's use of low-carbon iplus glass saves 10,000 t of CO_2 eq annually

Glass is an fundamental component in window production. As Europe's leading window brand, we take our responsibility seriously, and incorporate low-carbon iplus insulating glazing in our product range as standard.

In order to reduce greenhouse gas emissions, we analysed the entire low-carbon float glass production chain. This included activities before, during and after the actual manufacturing process, right through to delivery to the customer.

The result is a 4 mm thick, low-carbon float glass with a reduced carbon footprint of 5.5 kg CO_2 eq/m^2 that delivers emission savings of over 45%.

What turns low-carbon iplus glass into thermally insulated glass?

- Use of low-emission raw materials
- Use of highly efficient melting furnaces including electric boosting
- At least 50% recycled content, to conserve valuable raw materials
- Utilisation of renewable energies
- Optimised transport throughout the entire supply chain

Internorm Windows UK Ltd
NW9 OHN London
Unit D, Colindale Business Park, 2-10 Carlisle Road
+44 (0) 20 820 599 91
office@internorm.co.uk

05/2026