home pure

Internorm
Windows – Doors

KF 310 UPVC-ALUMINIUM-WINDOW



CHARACTERISTICS

Thermal insulation (in W/m²K)
U_w up to 0,69

Sound reduction (in dB)
up to 33 - 45

Security
up to RC 2

Locking
fully concealed

Installation Depth (in mm)
74

I-tec Glazing
I-tec Decor

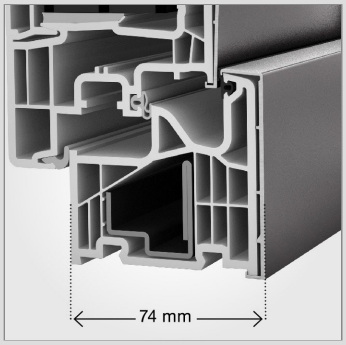

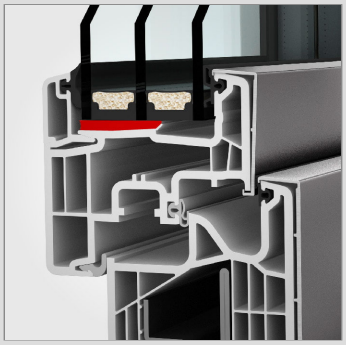

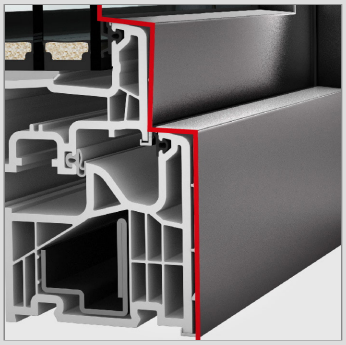

Our product developers have incorporated the proven and reliable technology of our Internorm windows into this slimline window. It offers the best thermal and sound insulation values, as well as the all-round bonding of the glass pane to the window sash, as standard. In addition to a large selection of colours, handles and glass options, the KF 310 is also available as a balcony and French door - and of course with a Juliet balcony. The square design of the frame and sash is matched to the exterior of the home pure design style. The new I-tec Decor digital printing technology enables a wide range of design options on the inside.

UPVC-ALUMINIUM-WINDOW

KF 310

home pure

Cuts

Senkrecht / Vertical

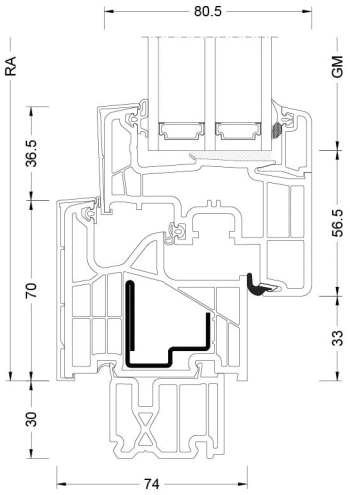

Waagrecht / Horizontal

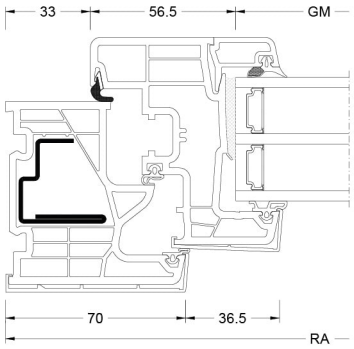

Stulp / Flying mullion

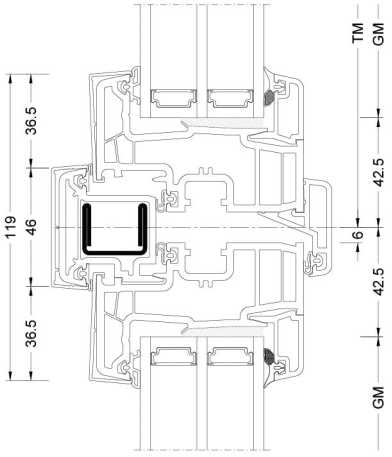

BM	Bestellmaß / Ordering size	GM	Glasmaß / Glass size
FM G	Flügelmaß Gehflügel / Sash size master sash	RA	Rahmenaußenmaß / Outside frame size
FM S	Flügelmaß Stehflügel / Sash size slave sash	TM	Teilungsmaß / Division size
FOK	Fußbodenoberkante / Finished floor level		

Values

Glass Build Up	GC	Coating	AH	U_g	g	U_f	Psi	U_w	R_w	C	Ctr	Certificate - Thermal Performance	Certificate - Sound
4/16Ar/b4	20L	Low-Carbon iplus	Iso	1,1	64	1,2	0,038	1,2	33	-2	-6	✓	✓
8/12Kr/b4	2KA	Low-Carbon iplus	Iso	1,0	62	1,2	0,038	1,1	37	-	-	✓	×
4b/18Ar/4/18Ar/b4	3N2	Low-Carbon iplus	Iso	0,5	53	1,1	0,034	0,76	34	-2	-6	✓	✓
6b/18Ar/4/16Ar/b4	33U	Low-Carbon iplus	Iso	0,5	52	1,1	0,034	0,76	39	-2	-6	✓	✓
44b.2(VSG-S)/15Ar/4/12Ar/b44.2(VSG-S)	3FH	Low-Carbon iplus	Iso	0,6	47	1,1	0,034	0,83	45	-2	-6	✓	✓

Internorm takes responsibility for the environment and climate

Internorm's use of low-carbon iplus glass saves 10,000 t of CO_2 eq annually

Glass is an fundamental component in window production. As Europe's leading window brand, we take our responsibility seriously, and incorporate low-carbon iplus insulating glazing in our product range as standard.

In order to reduce greenhouse gas emissions, we analysed the entire low-carbon float glass production chain. This included activities before, during and after the actual manufacturing process, right through to delivery to the customer.

The result is a 4 mm thick, low-carbon float glass with a reduced carbon footprint of 5.5 kg CO_2 eq/m^2 that delivers emission savings of over 45%.

What turns low-carbon iplus glass into thermally insulated glass?

- Use of low-emission raw materials
- Use of highly efficient melting furnaces including electric boosting
- At least 50% recycled content, to conserve valuable raw materials
- Utilisation of renewable energies
- Optimised transport throughout the entire supply chain

Internorm Windows UK Ltd
NW9 OHN London
Unit D, Colindale Business Park, 2-10 Carlisle Road
+44 (0) 20 820 599 91
office@internorm.co.uk

05/2026