home soft

Internorm
Windows – Doors

KF 310 UPVC-ALUMINIUM-WINDOW



CHARACTERISTICS

Thermal insulation (in W/m²K)
U_w up to 0,69

Sound reduction (in dB)
up to 33 - 45

Security
up to RC 2

Locking
fully concealed

Installation Depth (in mm)
74

I-tec Glazing
I-tec Decor

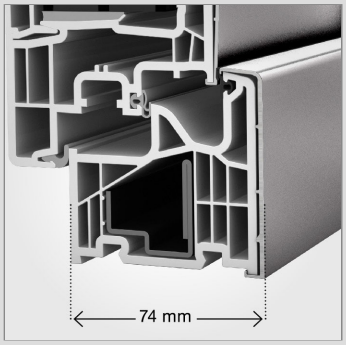

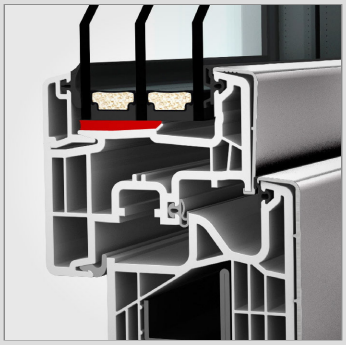

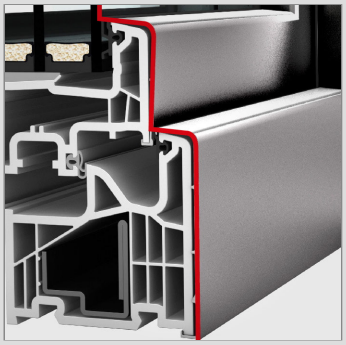

With a construction depth of 74 mm including the aluminium cladding, this window window offers a slim design. The rounded edges of the sash and frame perfectly match the home soft design style. The aluminium cladding on the outside can be designed in many colours. The new 6-chamber frame profile ensures even better thermal insulation. Three circumferential gaskets protect the interior from moisture and at the same time improve thermal and sound insulation. The new I-tec Decor digital printing technology enables a wide range of design options on the inside. Also available as a uPVC only window.

UPVC-ALUMINIUM-WINDOW

KF 310

home soft

Cuts

Senkrecht / Vertical

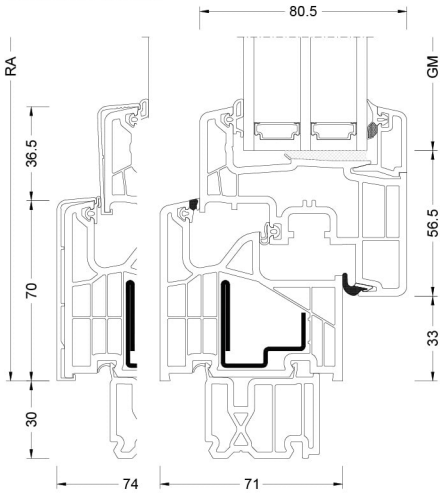

Waagrecht / Horizontal

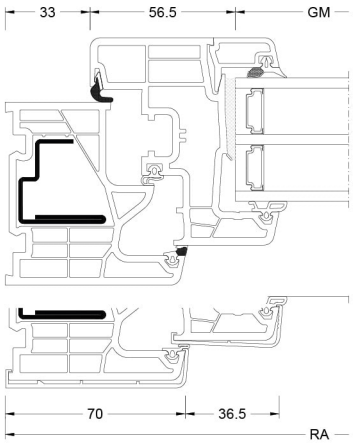

Stulp / Flying mullion

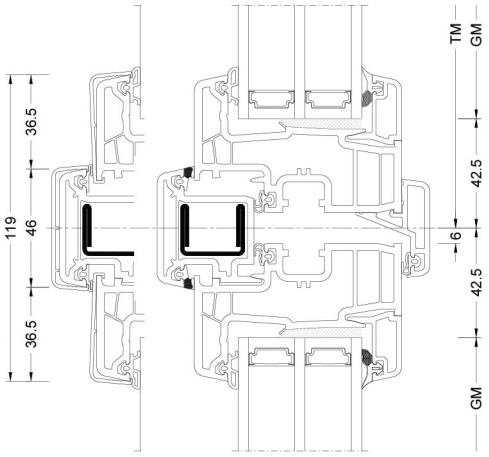

BM	Bestellmaß / Ordering size
FM G	Flügelmaß Gehflügel / Sash size master sash
FM S	Flügelmaß Stehflügel / Sash size slave sash
FOK	Fußbodenoberkante / Finished floor level
GM	Glasmaß / Glass size
RA	Rahmenaußenmaß / Outside frame size
TM	Teilungsmaß / Division size

Values

Glass Build Up	GC	Coating	AH	U_g	g	U_f	Psi	U_w	R_w	C	Ctr	Certificate - Thermal Performance	Certificate - Sound
4/16Ar/b4	20L	Low-Carbon iplus	Iso	1,1	64	1,2	0,038	1,2	33	-2	-6	✓	✓
8/12Kr/b4	2KA	Low-Carbon iplus	Iso	1,0	62	1,2	0,038	1,1	37	-	-	✓	×
4b/18Ar/4/18Ar/b4	3N2	Low-Carbon iplus	Iso	0,5	53	1,1	0,034	0,76	34	-2	-6	✓	✓
6b/18Ar/4/16Ar/b4	33U	Low-Carbon iplus	Iso	0,5	52	1,1	0,034	0,76	39	-2	-6	✓	✓
44b.2(VSG-S)/15Ar/4/12Ar/b44.2(VSG-S)	3FH	Low-Carbon iplus	Iso	0,6	47	1,1	0,034	0,83	45	-2	-6	✓	✓

Internorm takes responsibility for the environment and climate

Internorm's use of low-carbon iplus glass saves 10,000 t of CO_2 eq annually

Glass is an fundamental component in window production. As Europe's leading window brand, we take our responsibility seriously, and incorporate low-carbon iplus insulating glazing in our product range as standard.

In order to reduce greenhouse gas emissions, we analysed the entire low-carbon float glass production chain. This included activities before, during and after the actual manufacturing process, right through to delivery to the customer.

The result is a 4 mm thick, low-carbon float glass with a reduced carbon footprint of 5.5 kg CO_2 eq/m^2 that delivers emission savings of over 45%.

What turns low-carbon iplus glass into thermally insulated glass?

- Use of low-emission raw materials
- Use of highly efficient melting furnaces including electric boosting
- At least 50% recycled content, to conserve valuable raw materials
- Utilisation of renewable energies
- Optimised transport throughout the entire supply chain

Internorm Windows UK Ltd
NW9 OHN London
Unit D, Colindale Business Park, 2-10 Carlisle Road
+44 (0) 20 820 599 91
office@internorm.co.uk

05/2026

www.internorm.com