ambiente

Internorm
Windows – Doors

# KV 350 UPVC-ALUMINIUM-COMPOSITE WINDOW

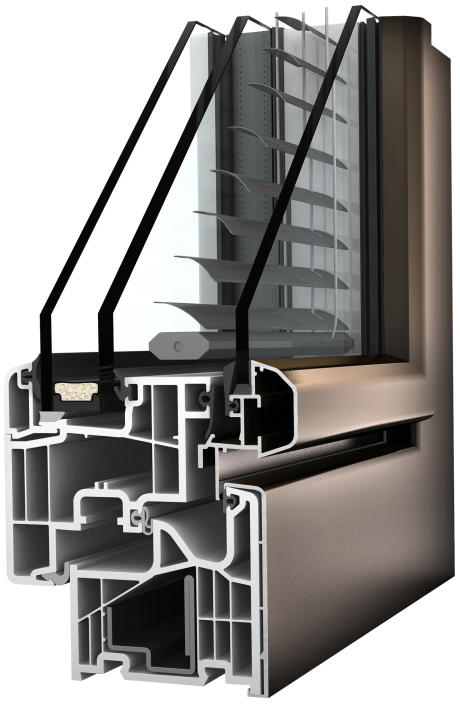

## CHARACTERISTICS

**Thermal insulation** (in W/m²K)
$U_w$ up to 0,79

**Sound reduction** (in dB)
up to 38 - 44

**Security**
up to RC 2

**Locking**
fully concealed

**Installation Depth** (in mm)
74

I-tec Glazing
I-tec Shading
I-tec Connect

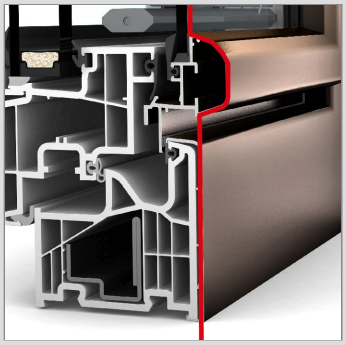

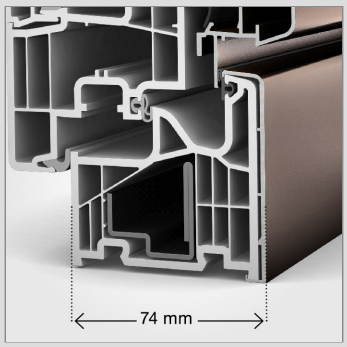




Despite the profiled edges of the window sash and frame, the KV 350 composite window has a very narrow design. Four additional advantages are hidden within this window: In addition to optimum sound and thermal insulation, the sun and privacy protection is also integrated directly into the window. This not only has advantages when cleaning, as the blinds are protected from wind, weather and dirt by the glass panes. You no longer have to do without sun protection, even with renovations or façades where shutters are not permitted. I-tec Shading with photovoltaic module and rechargeable battery is completely energy self-sufficient and also offers many useful functions.

UPVC-ALUMINIUM-COMPOSITE WINDOW

# KV 350

ambiente

## Cuts

Senkrecht / Vertical

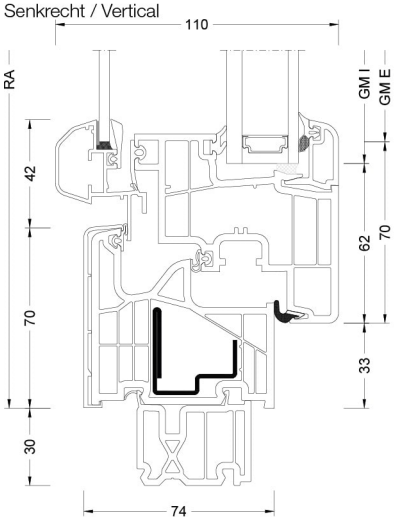


Waagrecht / Horizontal

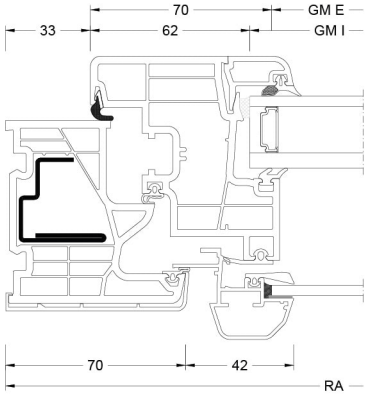


Stulp / Flying mullion

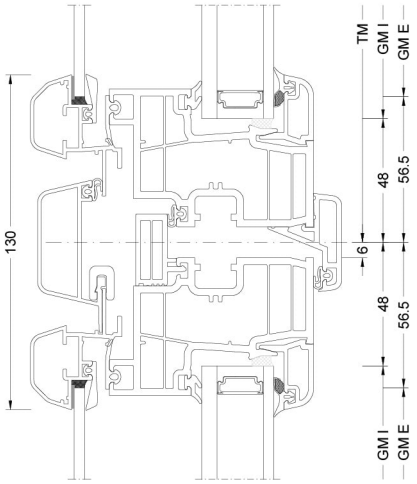


| | |
|---|---|
| BM | Bestellmaß / Ordering size |
| FM G | Flügelmaß Gehflügel / Sash size master sash |
| FM S | Flügelmaß Stehflügel / Sash size slave sash |
| FOK | Fußbodenoberkante / Finished floor level |
| GM | Glasmaß / Glass size |
| RA | Rahmenaußenmaß / Outside frame size |
| TM | Teilungsmaß / Division size |

## Values

| Glass Build Up | GC | Coating | AH | $U_g$ | g | $U_f$ | Psi | $U_w$ | $R_w$ | C | Ctr | Certificate - Thermal Performance | Certificate - Sound |
|---|---|---|---|---|---|---|---|---|---|---|---|---|---|
| 4 // 6/18Ar/b4 | 2KU | Low-Carbon iplus | Iso | 1,1 | - | 1,1 | 0,028 | 1,0 | 40 | -2 | -9 | ✓ | ✓ |
| 6 // 6/18Ar/b4 | 2KU | Low-Carbon iplus | Iso | 1,1 | - | 1,1 | 0,028 | 1,0 | 42 | -3 | -9 | ✓ | ✓ |
| 4 // 3bESG/10Kr/ 2TVG/10Kr/ b3ESG | 37F | Low-Carbon iplus | Iso | 0,6 | - | 1,1 | 0,033 | 0,79 | 38 | - | - | ✓ | × |
| 6 // 3bESG/10Kr/ 2TVG/10Kr/ b3ESG | 37F | Low-Carbon iplus | Iso | 0,6 | - | 1,1 | 0,033 | 0,79 | 40 | - | - | ✓ | × |

## Internorm takes responsibility for the environment and climate

**Internorm's use of low-carbon iplus glass saves 10,000 t of $CO_2$ eq annually**

Glass is an fundamental component in window production. As Europe's leading window brand, we take our responsibility seriously, and incorporate low-carbon iplus insulating glazing in our product range as standard.

In order to reduce greenhouse gas emissions, we analysed the entire low-carbon float glass production chain. This included activities before, during and after the actual manufacturing process, right through to delivery to the customer.

**The result is a 4 mm thick, low-carbon float glass with a reduced carbon footprint of 5.5 kg $CO_2$ eq/$m^2$ that delivers emission savings of over 45%.**

**What turns low-carbon iplus glass into thermally insulated glass?**

- Use of low-emission raw materials
- Use of highly efficient melting furnaces including electric boosting
- At least 50% recycled content, to conserve valuable raw materials
- Utilisation of renewable energies
- Optimised transport throughout the entire supply chain

**Internorm Windows UK Ltd**
NW9 OHN London
Unit D, Colindale Business Park, 2-10 Carlisle Road
+44 (0) 20 820 599 91
office@internorm.co.uk

05/2026