home pure

Internorm
Windows – Doors

KV 350 UPVC-ALUMINIUM-COMPOSITE WINDOW



CHARACTERISTICS

Thermal insulation (in W/m²K)
U_w up to 0,79

Sound reduction (in dB)
up to 38 - 44

Security
up to RC 2

Locking
fully concealed

Installation Depth (in mm)
74

I-tec Glazing
I-tec Shading
I-tec Connect

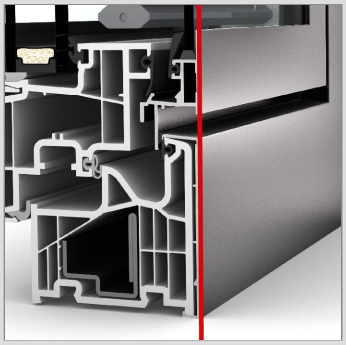

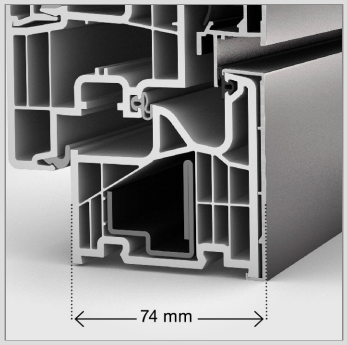



The modern and narrow KV 350 composite window conceals four advantages. In addition to optimum sound and heat insulation, the sun and privacy protection is also integrated directly into the window. This not only has advantages when cleaning, as the blinds are protected from wind, weather and dirt by the glass panes. You no longer have to do without sun protection, even with renovations or façades where shutters are not permitted. I-tec Shading with photovoltaic module and rechargeable battery is completely energy self-sufficient and also offers many useful functions.

UPVC-ALUMINIUM-COMPOSITE WINDOW

KV 350

home pure

Cuts

Senkrecht / Vertical

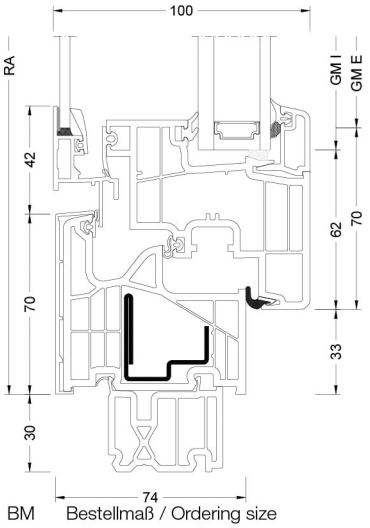

Waagrecht / Horizontal

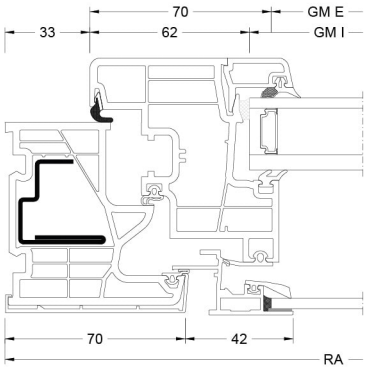

Stulp / Flying mullion

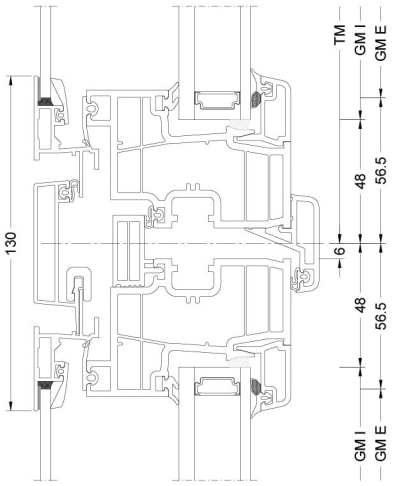

BM Bestellmaß / Ordering size
FM G Flügelmaß Gehflügel / Sash size master sash
FM S Flügelmaß Stehflügel / Sash size slave sash
FOK Fußbodenoberkante / Finished floor level

GM Glasmaß / Glass size
RA Rahmenaußenmaß / Outside frame size
TM Teilungsmaß / Division size

Values

Glass Build Up	GC	Coating	AH	U_g	g	U_f	Psi	U_w	R_w	C	Ctr	Certificate - Thermal Performance	Certificate - Sound
4 // 6/18Ar/b4	2KU	Low-Carbon iplus	Iso	1,1	-	1,1	0,028	1,0	40	-2	-9	✓	✓
6 // 6/18Ar/b4	2KU	Low-Carbon iplus	Iso	1,1	-	1,1	0,028	1,0	42	-3	-9	✓	✓
4 // 3bESG/10Kr/ 2TVG/10Kr/ b3ESG	37F	Low-Carbon iplus	Iso	0,6	-	1,1	0,033	0,79	38	-	-	✓	×
6 // 3bESG/10Kr/ 2TVG/10Kr/ b3ESG	37F	Low-Carbon iplus	Iso	0,6	-	1,1	0,033	0,79	40	-	-	✓	×

Internorm takes responsibility for the environment and climate

Internorm's use of low-carbon iplus glass saves 10,000 t of CO_2 eq annually

Glass is an fundamental component in window production. As Europe's leading window brand, we take our responsibility seriously, and incorporate low-carbon iplus insulating glazing in our product range as standard.

In order to reduce greenhouse gas emissions, we analysed the entire low-carbon float glass production chain. This included activities before, during and after the actual manufacturing process, right through to delivery to the customer.

The result is a 4 mm thick, low-carbon float glass with a reduced carbon footprint of 5.5 kg CO_2 eq/m^2 that delivers emission savings of over 45%.

What turns low-carbon iplus glass into thermally insulated glass?

- Use of low-emission raw materials
- Use of highly efficient melting furnaces including electric boosting
- At least 50% recycled content, to conserve valuable raw materials
- Utilisation of renewable energies
- Optimised transport throughout the entire supply chain

Internorm Windows UK Ltd
NW9 OHN London
Unit D, Colindale Business Park, 2-10 Carlisle Road
+44 (0) 20 820 599 91
office@internorm.co.uk

05/2026