ambiente

Internorm
Windows – Doors

KF 310 UPVC-WINDOW



CHARACTERISTICS

Thermal insulation (in W/m²K)
U_w up to 0,69

Sound reduction (in dB)
up to 33 - 45

Security
up to RC 2

Locking
fully concealed

Installation Depth (in mm)
71

I-tec Glazing
I-tec Decor

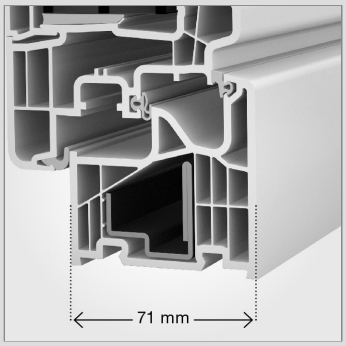

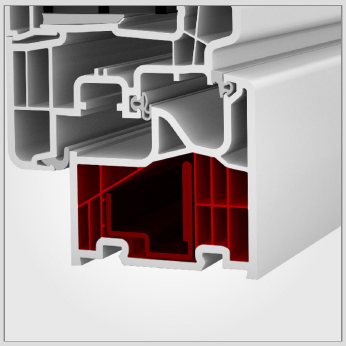



In classic white, the rounded edges of the sash and frame create an elegant and timeless appearance. I-tec Glazing, the all-round bonding of the glass pane, makes the window more stable and increases burglar resistance. The 6-chamber frame profile ensures even better thermal insulation. With a construction depth of 71 mm, the KF 310 offers a very slim design. The new I-tec Decor digital printing technology enables a wide range of design options on the inside.

UPVC-WINDOW
KF 310

ambiente

Cuts

Senkrecht / Vertical

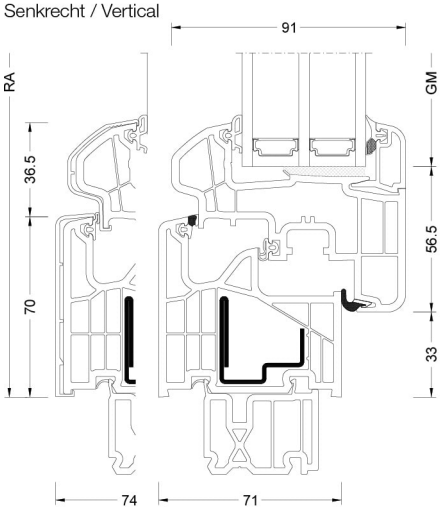

Waagrecht / Horizontal

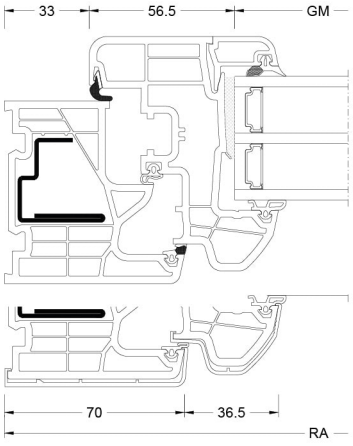

Stulp / Flying mullion

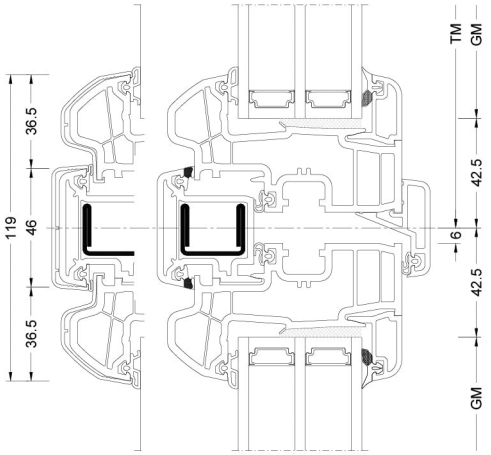

BM Bestellmaß / Ordering size
FM G Flügelmaß Gehflügel / Sash size master sash
FM S Flügelmaß Stehflügel / Sash size slave sash
FOK Fußbodenoberkante / Finished floor level

GM Glasmaß / Glass size
RA Rahmenaußenmaß / Outside frame size
TM Teilungsmaß / Division size

Values

Glass Build Up	GC	Coating	AH	U_g	g	U_f	Psi	U_w	R_w	C	Ctr	Certificate - Thermal Performance	Certificate - Sound
4/16Ar/b4	20L	Low-Carbon iplus	Iso	1,1	64	1,2	0,038	1,2	33	-2	-6	✓	✓
8/12Kr/b4	2KA	Low-Carbon iplus	Iso	1,0	62	1,2	0,038	1,1	37	-	-	✓	×
4b/18Ar/4/18Ar/b4	3N2	Low-Carbon iplus	Iso	0,5	53	1,1	0,034	0,76	34	-2	-6	✓	✓
6b/18Ar/4/16Ar/b4	33U	Low-Carbon iplus	Iso	0,5	52	1,1	0,034	0,76	39	-2	-6	✓	✓
44b.2(VSG-S)/15Ar/4/12Ar/b44.2(VSG-S)	3FH	Low-Carbon iplus	Iso	0,6	47	1,1	0,034	0,83	45	-2	-6	✓	✓

Internorm takes responsibility for the environment and climate

Internorm's use of low-carbon iplus glass saves 10,000 t of CO_2 eq annually

Glass is an fundamental component in window production. As Europe's leading window brand, we take our responsibility seriously, and incorporate low-carbon iplus insulating glazing in our product range as standard.

In order to reduce greenhouse gas emissions, we analysed the entire low-carbon float glass production chain. This included activities before, during and after the actual manufacturing process, right through to delivery to the customer.

The result is a 4 mm thick, low-carbon float glass with a reduced carbon footprint of 5.5 kg CO_2 eq/m^2 that delivers emission savings of over 45%.

What turns low-carbon iplus glass into thermally insulated glass?

- Use of low-emission raw materials
- Use of highly efficient melting furnaces including electric boosting
- At least 50% recycled content, to conserve valuable raw materials
- Utilisation of renewable energies
- Optimised transport throughout the entire supply chain

Internorm Windows UK Ltd
NW9 OHN London
Unit D, Colindale Business Park, 2-10 Carlisle Road
+44 (0) 20 820 599 91
office@internorm.co.uk

05/2026